# Quantum Teleportation of single photon pulses

Johannes C. Trapp

Supervisors:

Professer Howard J. Carmichael
A-Prof. Matthew J. Collett
Dr. A. Scott Parkins

Dissertation for the
Post-Graduate Diploma in Science
in Physics

The University of Auckland
Semester I, 2009

# Abstract

The term Quantum Teleportation describes the disembodied transfer of a quantum state with the help of an EPR resource. During the process the state to be teleported is destroyed at the input of the teleporter and a perfect copy of it is created on the output side. The information about the teleported state is transferred between the input and the output station in two parts. The quantum mechanical information is transferred via a pair of entangled particles or light beams and the classical part of the information about the state is transmitted through ordinary classical channels. The idea of quantum teleportation was first introduced for a descrete two variable system only but then generalised to continuous variables up to whole quantum fields with all its statistical properties.

The aim of this thesis is to investigate how well a single photon and later a stream of single photon pulses can be teleported. In order to do so, the protcol for broadband teleportation proposed by Noh [1] will be used and its suitability for teleporting single photons will be tested. For the purpose of testing the dependence of the teleportation quality on the various bandwidthes is first analysed qualitatively. Then a scheme for measureing the teleportation quality quantitatively is devised, based on the schemes for quantum state transfer of Parkins and Kimble [2] and Cirac *et al.* [3].

# Contents

# Chapter 1

# Introduction

Einstein, Podolsky and Rosen were not satisfied with the stochastic characteristics of quantum mechanics and believed that the theory of quantum mechanics was not complete. In 1935 they published a paper entitled 'Can Quantum-Mechanical Description of Physical Reality Be Considered Complete?' [4] (EPR-Paradox) in which they tried to prove the existence of variables, so called *hidden variables*, that were not yet taken into consideration by the theory of quantum mechanics. To illustrate their ideas they showed that nonlocal interaction occurs between two systems that are prepared in a certain way. These special kind of systems that are capeable of nonlocal interaction with another, are nowadays referred to as *entangled states* and are the foundation of quantum teleportation.
The EPR-Paradox, precisely the question of existence of hidden variables, was reformulated into a testable inequality in 1964 by John S. Bell [5] and experiements (the first one in 1972 by Freedman *et al.* [6]) on it showed that the concept of hidden variables is not right. But even though Einstein, Podolsky and Rosen have been proven to be wrong, the entangled states proposed by them play an essential role in quantum teleportation. A priori one may think about teleportation as the transport of an object over a spatial distance, but in fact it can be best described by a disembodied transport of the complete information of the object. The complete information consists of a part of classical information - transferred by a classical channel - and a part of quantum information - transferred by the entangled state, in this context called *EPR pair* or *EPR resource*. In order to gain these two parts of information the object is measured at the input of the teleporter and gets destroyed during the measurement. At the output the classical and quantum parts of the information are reesembled in a way that a perfect copy of the incoming object leaves the teleporter. The idea of quantum teleportation was proposed by Bennet *et al.* [7] in 1993 for discrete, two-value variables and later expanded by Vaidman [8] to continuous variables. Based on this, Braunstein and Kimble [9] proposed in 1998 a continuous variable teleportation protocol made out of optical tools, which was capable of teleporting a single mode of an electromagnetic field. In 1998 Furusawa *et al.* [10] suceeded in realising this protocol and even expanded it to broadband inputs [10]. The theory of broadband teleportation has been developed by van Loock *et al.* in 2000 [11]. Based on this theory Noh developes in his PhD Thesis [1] and unpublished paper [12] a protocol for the teleportation of a complete electromagnetic field with all its statistical properties.

The aim of this dissertation is to investigate how well single photons can be teleported. From there it is just a minor step towards the teleportation of single photon pulses. Noh's protocol will be used for this purpose and tested if it is capable of teleporting single photons. In order to do so the dependence of the teleportation quality on the various bandwidthes is first analysed qualitatively. Then a scheme for measureing the teleportation quality quantitatively is devised, based on schemes for quantum state transfer of Parkins and Kimble [2] and Cirac *et al.* [3].

## 1.1 Outline

The structure of the thesis will mostly follow the course of time of the developement of quantum teleportation, with inserted chapters and section on the background of quantum optics where necessary. Chapter 2 provides an introduction to the beginnings of quatum teleportation, explaining entangled states and showing the first teleportation scheme. Squeezed light will be introduced in chapter 3 as it is used as an EPR resource for the following teleportation schemes. Then proceeding to the continuous variable teleportation protocol in chapter 4 and the broadband teleportation protocol in chapter 5 and testing both protocols for their suitability of teleporting a single photon. In chapter 6 a quantitative measurement scheme for the broadband teleportation protocol is developed and finally chapter 7 concludes the results and gives a perspective for future work.

# Chapter 2

# History of Teleportation

A brief history of teleportation was given in the first chapter. In this chapter we will now follow the course of time more detailed until the first teleportation protocol proposed by Bennett *et al.* in 1993 [7]. Going back to the beginnings of quantum teleportation will help us understand the physical background - like *entangled states* - and the principles of teleportation.

## 2.1 Entangled States

In 1935 Einstein, Podolsky and Rosen wanted to show that the theory of quantum mechanics is incomplete [4]. Their line of argumentation can be summarized as follows: Because of the Heisenberg uncertainty principle the measurement of two noncommuting operators cannot be done. In fact quantum mechanics states, that if a system is in an eigenstate of one operator, all eigenvalues from other operators have no physical reality. In order to show that a system 'inherits' the eigenvalues of other operators as well, they used two spatially seperated particles as an example (These kind of particles are now called *EPR-pair* or *EPR-resource*). These particles have been through an mutual interaction until time $t = T$ and their states were known before the interaction. Einstein, Podolsky and Rosen assumed - falsely - that the particles cannot interact with antoher after the time $t = T$. The state of the system can be written as

$$\Psi(x_1, x_2) = \int_{-\infty}^{\infty} \psi_i(x_2)\, u_i(x_1)\, dp = \int_{-\infty}^{\infty} e^{\frac{i}{\hbar}\,(x_1 - x_2 - x_0)\,p} dp \tag{2.1}$$

Where the term in the middle descirbes the expansion of the state $\Psi(x_1, x_2)$ into orthogonal functions $u_i(x_1)$, which can be the eigenfunctions of any operator. Einstein, Podolsky and Rosen considered the two cases where $u_i(x_1)$ are the eigenfunctions of the momentum operator $P = \frac{i}{\hbar}\frac{\partial}{\partial x}$ (eigenvalue p) and the coordinate operator $Q = x$ (eigenvalue x), indexed p and x, respectively and both operating on the first particle only. Note that given a $u_i(x_1)$, $\psi_i(x_2)$ can be calculated out of equation (2.1). For $u_i(x_1)$ eigenstate of the momentum operator, $u_p(x_1)$ and $\psi_p(x_2)$ become

$$u_p(x_1) = e^{\frac{i}{\hbar}\,x_1\,p}, \quad \psi_p(x_2) = e^{-\frac{i}{\hbar}\,(x_2 - x_0)\,p} \tag{2.2}$$

This $\psi_p(x_2)$ however is just the eigenvalue of the momentum operator of the second particle with eigenvalue $-p$. This means, that by measuring the momentum of the first particle one can determine the momentum of the second particle without direct measurement. The same holds true if $u_i(x_1)$ were the eigenstate of the coordinate operator. So it is shown - under the assumption of no interaction between the particles, that the eigenvalues of the momentum- and the coordinate operators can both be inherited in the same reality. This leads Einstein, Podolsky and Rosen to the conclusion that quantum mechanical description cannot be complete and that there are *hidden* variables that have to be added.

Bell investigated theories with hidden variables and showed 1964 in general that a hidden variable theory cannot reproduce the quantum mechanical expectation value neither accurately nor arbitrarily close [5]. Other than Einstein, Podolsky and Rosen, Bell used two spin-half particles in a singlet state as an EPR-resource to illustrate his idea. In that scenario spin measurements of the spatially seperated particles (denoted by $\sigma_1$ and $\sigma_2$) along the same vector give opposite values. If the value of the first particle along a vector $\vec{a}$ is found to be 1, the measurement along the same vector at the distant second particle gives -1. (i.e. $\sigma_1 \cdot \vec{a} = 1,\ \sigma_2 \cdot \vec{a} = -1$). The expectation value of the measurements - where second measurement is now along vector $\vec{b}$ - is given by

$$\langle \sigma_1 \cdot \vec{a}\ \ \sigma_2 \cdot \vec{b} \rangle = -\vec{a} \cdot \vec{b} \tag{2.3}$$

. Bell compared this quantum mechanical expectation value to the expectation value devised from a hidden variable theory. In order to so he introduced $\lambda$ as the hidden variable parameter, which - besides the vectors - determined the result of measurement A $\sigma_1 \cdot \vec{a}$ and B $\sigma_2 \cdot \vec{b}$. Precisely:

$$A(\vec{a}, \lambda) = \pm 1, \quad B(\vec{b}, \lambda) = \pm 1. \tag{2.4}$$

With $\rho(\lambda)$ the normalized probability distribution of $\lambda$, the expectation value of both measurements is then given by

$$P(\vec{a}, \vec{b}) = \int \mathrm{d}\lambda\, \rho(\lambda)\, A(\vec{a}, \lambda)\, B(\vec{b}, \lambda). \tag{2.5}$$

At its lowest value -1 and with $\vec{a} = \vec{b}$ the results of the measurements must be opposite, i.e. $A(\vec{a}, \lambda) = -B(\vec{a}, \lambda)$. That converts the expectation value (2.5) into

$$P(\vec{a}, \vec{b}) = -\int \mathrm{d}\lambda\, \rho(\lambda)\, A(\vec{a}, \lambda)\, A(\vec{b}, \lambda), \tag{2.6}$$

In order for equation(2.6) to become a quantum mechanical expectation value, it has to be stationary at its minimal value of -1 (with $\vec{a} = \vec{b}$). But after a few subsitutions and with the help of a third unit vector $\vec{c}$ Bell found that (2.6) can be rewritten into an inequality that reads

$$1 + P(\vec{a}, \vec{b}) \geq |P(\vec{c}, \vec{b}) - P(\vec{c}, \vec{b})| \tag{2.7}$$

Because the right hand side varies with magnitude $|\vec{a} - \vec{b}|$ around $\vec{a} = \vec{b}$, $P(\vec{a}, \vec{b})$ cannot be stationary and therefore not a quantum mechanical expectation value.

Bell also showed in his paper that the quantum mechanical expectation value (2.3) cannot be approximated by the hidden variable theory expectation value (2.5). Alltogether he found that

the quantum theory cannot be expanded by hidden variables and therefore either the quantum theory or the hidden variable theory describes nature. A series of experiments has been done to determine in which way nature behaves - the first one in 1972 by Freedman *et al.* [6]) - and they yield to the result that nature 'favours' the quantum mechanical description.
But the absence of hidden variables - and therefore the predetermination of the states of the particles - means, that the measurement of one particle affects the states of the other one, even though it can be in very remote location and that the interaction can be seen as a non-local interaction between the two particles. On the first sight it seems, that the non-local interaction violates the uncertainty principle, but as the interaction cannot be used to transfer information the uncertainty priciple still holds. Nowadys the ability of non-local interaction between to particles is called *entangelment* or the states are refered to as *entangled states*.

## 2.2 Discrete Variable Teleportation

Even though the hidden variable theory of Einstein, Podolsky and Rosen did not hold, they were the first think of entangled states. In 1993 Bennett *et al.* proposed a scheme for transferring a quantum state from a sender to a distant receiver using entangled states. This process is called *teleportation* and this version is in so far similar to the teleportation in science-fiction that an object or a person (in our case a quantum state) dissapears at the sending station, while a exact replica appears at the receiver. It is important to note, that the object at the sending station is destroyed in order to perform the teleportation. If that were not be the case, it would be possible to make a copy of the quantum state. But with an exact copy of a quantum state, one could perform measurements of two non-commuting variables (one on each state) and therefore violate the Heisenberg uncertainty principle. Benett's teleportation scheme differs from science-fiction teleportation in so far, that it is not instantaneuos because classical information has to be passed on to the receiving station. From now on, we will call the sender "Alice" and the receiver "Bob". The foundation of all teleportation protocols is an EPR-Pair shared between Alice and Bob prior to the teleportation. In Bennett's scheme the EPR-Pair are two particles (indexed a and b) in a singlet state, that can be described by the wavefunction

$$|\Psi_{a,b}\rangle = \sqrt{\frac{1}{2}}\,(\,|\uparrow_a\rangle|\downarrow_b\rangle - |\downarrow_a\rangle|\uparrow_b\rangle\,)\,. \tag{2.8}$$

The state input particle $c$ can be written as

$$|\psi_c\rangle = a\,|\uparrow_c\rangle + b\,|\downarrow_c\rangle, \tag{2.9}$$

with $|a|^2 + |b|^2 = 1$. Before the teleportation the state of the total system consisting of the EPR pair and the input state can be written as

$$|\Psi_{abc}\rangle = \frac{a}{\sqrt{2}}(|\uparrow_a\rangle\,|\downarrow_b\rangle\,|\uparrow_c\rangle + |\downarrow_a\rangle\,|\uparrow_b\rangle\,|\uparrow_c\rangle) = \frac{b}{\sqrt{2}}(|\uparrow_a\rangle\,|\downarrow_b\rangle\,|\downarrow_c\rangle + |\downarrow_a\rangle\,|\uparrow_b\rangle\,|\downarrow_c\rangle) \tag{2.10}$$

Now the teleportation can take place and the protocol involves the following five steps, assuming that the input state is given to Alice:

1. Alice and Bob share an EPR pair
2. Alice creates a mixed state of her input particle and her part of the EPR pair
3. Alice fulfills a conjoint measurement on her joint state
4. Alice transfers her measurement results to Bob
5. Bob transforms a unitary transformation based on Alice's results on his share of the EPR pair and receives the input particle

In Bennett's protocol step 2 and 3 are carried out simultaniuosly by performing a measurement of the von Neumann type on the input particle $c$ and her share of the EPR pair $a$. The measurement is performed in the following orthonormal basis, called the Bell operator basis [13]

$$\begin{aligned} |\Psi_{ac}^{(\pm)}\rangle &= \sqrt{\frac{1}{2}}(|\uparrow_c\rangle\,|\downarrow_a\rangle \pm |\downarrow_c\rangle\,|\uparrow_a\rangle) \\ |\Phi_{ac}^{(\pm)}\rangle &= \sqrt{\frac{1}{2}}(|\uparrow_c\rangle\,|\uparrow_a\rangle \pm |\downarrow_c\rangle\,|\downarrow_a\rangle) \end{aligned} \tag{2.11}$$

Now equation (2.10) can be expressed in terms of equation(2.12) and we obtain

$$\begin{aligned} |\Psi_{abc}\rangle = \frac{1}{2}[\,|\Psi_{ac}^{(-)}\rangle \overbrace{(-a\,|\uparrow_b\rangle - b\,|\downarrow_b\rangle)}^{|\psi_b^1\rangle} + |\Psi_{ac}^{(+)}\rangle \overbrace{(-a\,|\uparrow_b\rangle + b\,|\downarrow_b\rangle)}^{|\psi_b^2\rangle} + \\ +|\Phi_{ac}^{(-)}\rangle \underbrace{(a\,|\downarrow_b\rangle + b\,|\uparrow_b\rangle)}_{|\psi_b^3\rangle} + |\Phi_{ac}^{(+)}\rangle \underbrace{(a\,|\downarrow_b\rangle - b\,|\uparrow_b\rangle)}_{|\psi_b^4\rangle}] \end{aligned} \tag{2.12}$$

It is now obvious that for everyone of the four measurement outcomes of Alice ($|\Psi_{ac}^{(\pm)}\rangle$or$|\Phi_{ac}^{(\pm)}\rangle$), Bob ends up with a different state ($|\psi_b^{1,2,3,4}\rangle$). With the knowledge of Alice's measurement result Bob can then transform his share of the EPR pair into the input state via a unitary transformation. The transformation are given by

$$\begin{aligned} |\psi_b^1\rangle = \begin{pmatrix} -a \\ -b \end{pmatrix} = -|\psi_c\rangle, \qquad \begin{pmatrix} -1 & 0 \\ 0 & 1 \end{pmatrix} |\psi_b^2\rangle = |\psi_c\rangle \\ \begin{pmatrix} 0 & 1 \\ 1 & 0 \end{pmatrix} |\psi_b^3\rangle = |\psi_c\rangle, \qquad \begin{pmatrix} 0 & -1 \\ 1 & 0 \end{pmatrix} |\psi_b^2\rangle = -|\psi_c\rangle \end{aligned} \tag{2.13}$$

After performing one of the above transformation Bob has reproduced the input state except for an irrelevant phase factor and the teleportation is complete. Note that Alice is left with the input particle and her share of the EPR pair in one of the states $|\Psi_{ac}^{(\pm)}\rangle$ or $|\Phi_{ac}^{(\pm)}\rangle$ which do not contain any information about the input state $|\psi_c\rangle$ as demanded by the uncertainty principle.
At this point in time, we will end our excursion into the history of teleportation as we are now quite familiar with the principles of it. Before we can proceed to the teleportation of continuous

variables (Chapter 4), we will have to understand the phenomenon of *squeezed light*, as it is used as an EPR resource for continuous variable teleportation protocols. We will do so in the next chapter.

# Chapter 3

# Introduction to Squeezed light

In this chapter some of the basic ideas of quantum optics are discussed. The focus of the discussion lies on the phenomenon of squeezing, as two squeezed states are used as the EPR pair of the continuous variable teleportation protocols.
However, the discussions are far from completeness, derivations are not presented and shall give a brief overview only.

## 3.1 Quantization of the electromagnetic field

After the quantization of matter (i.e. atoms) the investigation of the quantum mechanical interaction of atoms with electromagnetic radiation was the next step. The field of physics which deals with theses kind of interactions is called Quantum Optics and in order to do so, a quantum mechanical description of the electromagnetic field is needed.
One can think of an electromagnetic field as the superposition of single modes of different frequency. The easiest and most intuitive way of describing these modes is to think of them as harmonic oscillators. This is the standard approach used in many textbook, see for example [14] and [15]. As the Hamiltonian of a single oscillator is $\hat{H} = \hbar\omega(\hat{n} + \frac{1}{2})$ where $\hat{n}$ stands for the photon number operator, the Hamiltion of the electromagnetic field - as a superposition of these oscillators - becomes

$$\hat{H} = \sum_k \hbar\omega_k \left(\hat{n}_k + \frac{1}{2}\right). \tag{3.1}$$

The term $\sum \frac{1}{2}$ is ground state energy that evolves from vacuum fluctuations.
The photon number operator$\hat{n}$ can be rewritten in terms of the standard harmonic oscillator creation and annihilation operators $\hat{a}^\dagger$ and $\hat{a}$, respectively, which obey the commutation relation given by

$$[\hat{a}, \hat{a}^\dagger] = 1. \tag{3.2}$$

Using the operators as the normal mode amplitude and its conjugate, one can write the electromagentic field as

$$\hat{\vec{E}}(\vec{r},t) = \sum_{\vec{k},\lambda} \vec{\epsilon}_{\vec{k},\lambda} A_{\vec{k}} \hat{a}_{\vec{k},\lambda} e^{-i(\omega_{\vec{k}} t - \vec{k}\cdot\vec{r})} + h.c., \tag{3.3}$$

where $h.c.$ means the hermitian conjugate, $\epsilon_{\vec{k}}$ the polarization vector and $A_{\vec{k}}$ is a constant involving $\omega_{\vec{k}}$ to get to the right units. The field is usually spilt up into two terms of positive and negative frequency:

$$\hat{\vec{E}}(\vec{r},t) = \hat{\vec{E}}^{(+)}(\vec{r},t) + \hat{\vec{E}}^{(-)}(\vec{r},t), \tag{3.4}$$

where

$$\hat{\vec{E}}^{(+)}(\vec{r},t) = \sum_{\vec{k},\lambda} \vec{\epsilon}_{\vec{k},\lambda} A_{\vec{k}} \hat{a}_{\vec{k},\lambda} e^{-i(\omega_{\vec{k}} t - \vec{k}\cdot\vec{r})} \tag{3.5}$$

$$\hat{\vec{E}}^{(-)}(\vec{r},t) = \hat{\vec{E}}^{(+)}(\vec{r},t)^{\dagger}. \tag{3.6}$$

However, we will use another notation of the electromagnetic field with units of photon flux. And due to the fact that all our fields evolve from cavities, we can use the input-output formalism developed by Collet and Gardiner [16]. This gives rise to the following expression for the fields:

$$\mathcal{E}(t) = \sqrt{2\gamma}\hat{a}(t) - \xi^t, \tag{3.7}$$

where $\gamma$ stands for the fields halfwidth and $\xi^t$ for vacuum fluctuation.

## 3.2 Quadrature Operators

In the previous section we used the creation and annihilaton operator to describe the electromagnetic field. But the field can also be described by other operators. We will now introduce the *quadrature operators* and rewrite the electromagnetic field in terms of two specific quadrature operators to illustrate their physical meaning. The definition of quadrature operators rely on the creation and annihilaton operators as follows

$$\hat{A}_\theta := \frac{1}{2}\left(ae^{-i\theta} + a^\dagger e^{i\theta}\right). \tag{3.8}$$

Operator defined in that way are Hermitian and therefore measurable experimentally. Furthermore it is easy to proof that the canonically conjugate of $A_\theta$ is simply

$$A_{\theta+\frac{\pi}{2}} = \frac{1}{2i}\left(ae^{-i\theta} - a^\dagger e^{i\theta}\right). \tag{3.9}$$

In our case we are only using the quadrature operator for $\theta = 0$ and its canonically conjugate and call them $\hat{X}$ and $\hat{Y}$, respectively.

$$\hat{X} = \frac{1}{2}\left(a + a^\dagger\right), \qquad \hat{Y} = \frac{1}{2i}\left(a - a^\dagger\right). \tag{3.10}$$

As from now we will refer to these two operators as the quadrature operators. By definition $\hat{X}$ and $\hat{Y}$ are canonically conjugate operators, so their commutator does not vanish but becomes

$$[\hat{X}, \hat{Y}] = \frac{i}{2}. \tag{3.11}$$

That means, that they cannot be measured simultaneously but obey the Heisenberg Uncertainty Principle.

Now we want to illustrate the physical meaning of the quadrature operators. Rearranging their definitions lead to expressions for $\hat{a}$ and $\hat{a}^\dagger$

$$\hat{a} = \hat{X} + i\hat{Y}, \qquad \hat{a}^\dagger = \hat{X} - i\hat{Y}. \tag{3.12}$$

Putting that into the expression of the electric field (3.3) we obtain

$$\hat{\vec{E}} = \sum_{\vec{k},\lambda} \vec{\epsilon}_{\vec{k},\lambda} A_{\vec{k}} \left[ \hat{X}_{\vec{k},\lambda} \cos(-\omega_{\vec{k}} t + \vec{k} \cdot \vec{r}) + \hat{Y} \sin(-\omega_{\vec{k}} t + \vec{k} \cdot \vec{r}) \right] \tag{3.13}$$

From that equation it becomes obvious that the quadrature operators $\hat{X}$ and $\hat{Y}$ are just the amplitude operators of the cosinusoidally and sinusoidally varying parts of the electric field.

## 3.3 The creation of squeezed via a degenerate parametric amplifier in a cavity

Usually squeezed light is introduced by defining a squeezing operator and then describing the effect of the operator on the quadratures. However, we will approach squeezing 'hands on' by exploring the creation of squeezed light via a degenerate parametric amplifier in a cavity. We will closely follow the approach of Collet and Gardiner [16].

### 3.3.1 The intracavity field

The starting point of our decription will be the expression of the field inside a cavity - the *intracavity field* - in terms of the input field. Describing the intracavity field as a system coupled to a reservoir we can use the Langevin equations to describe the time evolution. (see for example [15])

$$\frac{d\hat{a}}{dt} = -\frac{i}{\hbar}[\hat{a}, H_{sys}] - \gamma\hat{a} + \Gamma \tag{3.14}$$

where $\Gamma$ is the noise operator, $H_{sys}$ the Hamiltonian for the internal mode and $2\gamma$ the damping constant. We will see later on that $\gamma$ becomes the halfwidth of the squeezed field. For a one sided cavity $\Gamma$ is simply the input field $\hat{a}_{in}$ times a constant $\gamma'$. $H_{sys}$ describes the internal modes and is in the case of an empty cavity just the Hamilton of an harmonic oscillator with frequency $\omega_0$.

$$\hat{H}_{sys} = \hbar\omega_0 \hat{a}^\dagger a. \tag{3.15}$$

Later on we will replace $\hat{H}_{sys}$ by the Hamliton for a degenerate parametric amplifier.
Now that we have gathered our different parts of the Langevin equation (3.14), it looks like

$$\frac{d\hat{a}}{dt} = -\frac{i}{\hbar} - i\omega_0\hat{a} - \gamma\hat{a} + \gamma'\hat{a}_{in}. \tag{3.16}$$

Transforming this equation into frequency space via

$$\hat{a}(\omega) = \frac{1}{\sqrt{2\pi}} \int_{-\infty}^{\infty} \hat{a}(t)\, e^{i\omega\, t}, \tag{3.17}$$

it can been shown that $\gamma' = \sqrt{\gamma}$ and thus we get a equation relating the incoming field with the intracavity field in frequency space

$$\hat{a}(\omega) = \frac{\sqrt{\gamma}}{\gamma - i(\omega - \omega_0)} \hat{a}_{in}(\omega) \tag{3.18}$$

Note that the commutators in frequencyspace are given by

$$[\hat{a}_{in}(\omega), \hat{a}_{in}(\omega')] = 0, \qquad \left[\hat{a}_{in}(\omega), \hat{a}^{\dagger}_{in}(\omega')\right] = \delta(\omega - \omega'). \tag{3.19}$$

### 3.3.2 The degenerate parametric amplifier in a cavity

In the previous subsection we dervied a formula for the intracavity filed for the empty cavity. Now we can expand equation (3.18) into the desired case with a degenerate parametric amplifier inside the cavity. In short a degenerate parametric amplifier converts a photon of the incoming pump beam with frequency $\omega_p = 2\omega_0$ into two photons with frequency $\omega_0$ each. The Hamiltonian for a degenerate parametric amplifier is given by (see for example [15])

$$\hat{H}_{sys} = \hbar\, \omega_0\, \hat{a}^{\dagger} a + \frac{1}{2} i\hbar \left(\epsilon\, e^{-i\omega_p t}\, (\hat{a}^{\dagger})^2 - \epsilon^*\, e^{i\omega_p t}\, \hat{a}^2\right), \tag{3.20}$$

where $\epsilon$ is a measure for the effective pump intensity and can generally be complex. But for our purposes the complex phase will cancel out later on and is therefore not taken into consideration here. We will proceed in writing $\epsilon$ for the complex modulus instead of $|\epsilon|$. The above Hamiltonian (3.20) will now replace $H_{sys}$ in equation (3.14) and then we transform into a frame rotating with half the pump frequency via

$$a \to e^{-i\omega_0 t}\hat{a}. \tag{3.21}$$

This yields to the following Langevin equation in matrix form

$$\frac{d\hat{\vec{a}}}{dt} = (A - \gamma\mathbf{1})\hat{\vec{a}}\, \sqrt{\gamma}\, \hat{\vec{a}}_{in}, \tag{3.22}$$

where $\mathbf{1}$ is the identity matrix and

$$A = \begin{pmatrix} 0 & \epsilon \\ \epsilon^* & 0 \end{pmatrix}, \qquad \hat{\vec{a}} = \begin{pmatrix} \hat{a} \\ \hat{a}^{\dagger} \end{pmatrix}. \tag{3.23}$$

Solving (3.22) in frequency space one obtains a expression similar to equation (3.18) which relates the incoming field to the intracavity field:

$$\hat{a}(\omega_0 - \omega) = \frac{(\gamma - i\omega)\sqrt{\gamma}\hat{a}_{in}(\omega_0 + \omega) + \epsilon\sqrt{\gamma}\hat{a}_{in}(\omega_0 - \omega)}{(\gamma - i\omega)^2 - \epsilon^2} \tag{3.24}$$

As we now have an expression for $\hat{a}$ we can calculate variances and correlation functions. First of all we note that the input field is a vacuum field and therefore $\hat{a}_{in}$ has the following expectation values (compare [15])

$$\langle \hat{a}_{in} \rangle = \langle \hat{a}_{in}^\dagger \rangle = \langle \hat{a}_{in}\hat{a}_{in} \rangle = \langle \hat{a}_{in}^\dagger \hat{a}_{in} \rangle = 0 \tag{3.25}$$

The variance is given by

$$\langle \hat{a}, \hat{b} \rangle = \langle \hat{a}\hat{b} \rangle - \langle \hat{a} \rangle \langle \hat{b} \rangle \tag{3.26}$$

Using equation (3.25), the variances of the intracavity field are given by the following equations.

$$\langle \hat{a}(\omega_0 + \omega), \hat{a}(\omega_0 + \omega') \rangle = \frac{\gamma - i\omega}{2} \left( \frac{1}{(\gamma - \epsilon)^2 + \omega^2} - \frac{1}{(\gamma + \epsilon)^2 + \omega^2} \right) \delta(\omega + \omega'), \tag{3.27}$$

$$\langle \hat{a}^\dagger(\omega_0 + \omega), \hat{a}(\omega_0 + \omega') \rangle = \frac{\epsilon}{2} \left( \frac{1}{(\gamma - \epsilon)^2 + \omega^2} - \frac{1}{(\gamma + \epsilon)^2 + \omega^2} \right) \delta(\omega - \omega') \tag{3.28}$$

As the non commutator terms vanish, the variances equal the correlation functions of the field. Transforming these expressions back into time space and introducing the sqeezing parameter $\lambda = \frac{\epsilon}{\gamma}$, $0 < \lambda < 1$ gives the correlation functions of the intracavity field

$$\langle \hat{a}(t')\, \hat{a}(t'') \rangle = -\frac{1}{4} \left[ \frac{\lambda}{1 - \lambda}\, e^{-\gamma\,(1-\lambda)\,|t' - t''|} + \frac{\lambda}{1 + \lambda}\, e^{-\gamma\,(1+\lambda)\,|t' - t''|} \right] \tag{3.29}$$

$$\langle \hat{a}^\dagger(t')\, \hat{a}(t'') \rangle = \frac{1}{4} \left[ \frac{\lambda}{1 - \lambda}\, e^{-\gamma\,(1-\lambda)\,|t' - t''|} - \frac{\lambda}{1 + \lambda}\, e^{-\gamma\,(1+\lambda)\,|t' - t''|} \right]. \tag{3.30}$$

We will make use of these correlation functions in 5.1.2 in order to calculate the outgoing photon flux of the teleporter.

## 3.4 Squeezing

After all the calculations, we will now interpret them and explain squeezed light. To do so we will explore the influence of the degenerate parametric amplifier on the quadrature amplitudes, precisely the variance of the normally ordered quadrature amplitudes, and finally get to the meaning of what squeezing. Recalling the definitions of the quadrature operators (3.10), their variances can be written as:

$$\begin{aligned} \langle : \hat{X}, \hat{X} : \rangle(t) &= \langle : \frac{1}{2}(\hat{a}(t) + \hat{a}^\dagger(t))\, \frac{1}{2}(\hat{a}(t) + \hat{a}^\dagger(t)) : \rangle \\ &= \frac{1}{2} \left[ \langle \hat{a}\, \hat{a} \rangle + \langle \hat{a}^\dagger\, \hat{a} \rangle \right] \\ &= -\frac{1}{4}\, \frac{\lambda}{(1 + \lambda)} \end{aligned} \tag{3.31}$$

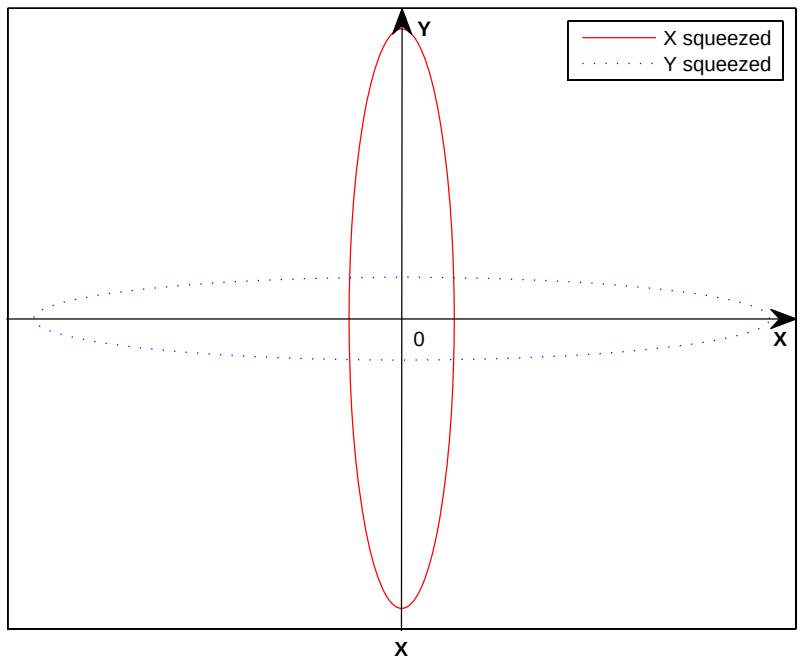


Figure 3.1: Quadrature plots of squeezed light. Solid, red line: field squeezed in X direction; dashed, blue line: field squeezed in Y direction,

$$\langle : \hat{Y}, \hat{Y} : \rangle(t) = +\frac{1}{4}\,\frac{\lambda}{(1-\lambda)} \tag{3.32}$$

The effect of the squeezing parameter $\lambda$ is obvious. As it increases, the variance of the X-quadrature decreases but at the expense of the Y-quadrature variance. The increasing variance of the Y-quadrature is necessary because of the Heisenberg uncertainty principle. If the Y variance would not increase while decreasing the X variance, squeezing would be able to violate the uncertainty principle. Figure 3.1 shows a quadrature plot of two squeezed fields to illustrate squeezing. The ellipses indicate the variances of the quadratures and thus define the range in which the field fluctuates. In this representation a vacuum field would be just a circle around the origin and according to our considerations for a X squeezed light field (solid, red line) the minor axis of the ellipses is parallel to the X axis, indicating less fluctuations in this quadrature.

In short squeezing can be seen as the process of reducing of fluctuations of one quadrature while increasing the fluctations in the other. One of the application of squeezed light is the creation of entagled light beams. This will be explained in detail in section 4.1.

## 3.5 The Squeezing Operator

As said at the beginning of the chapter, squeezing can be formally approached by introducing a squeezing operator. Here we will just show the operator and its effect on the quadrature operators

rather briefly. The unitary squeezing operator $\hat{S}(\epsilon)$ with the complex squeezing paramter $\epsilon = r\, e^{2i\phi}$ is defined as

$$\hat{S}(\epsilon) = exp\left[\frac{1}{2}\,\epsilon^*\,\hat{a}^2 - \frac{1}{2}\,\epsilon\,(\hat{a}^\dagger)^2\right]. \tag{3.33}$$

Note the similarity between the exponent in (3.33) and the part of the degeneric amplifier of the Hamiltonian in equation (3.20). The effect of $\hat{S}(\epsilon)$ at $\phi = 0$ on the the X and Y quadratures is

$$\hat{S}^\dagger(r)\,\hat{X}\,\hat{S}(r) = \hat{X}\,e^{-r}, \qquad \hat{S}^\dagger(r)\,\hat{Y}\,\hat{S}(r) = \hat{Y}\,e^{r}. \tag{3.34}$$

That explicitly shows - in accordance to our derivation - that squeezing amplifies one quadrature while deamplifying the conjugate one. Note that the squeezing parameter $r$ here can take values from 0 to $\infty$, where $r \to \infty$ refers to perfect squeezing, meaning that only one quadrature remains in the field.

# Chapter 4

# Continuous Variable Teleportation

The teleportation protocol of Bennett *et el.* for discrete variables, which we have discussed in section 2.2, can be expanded to continuous variables. Continuous variable teleportation was first proposed by Vaidman in 1994 [8] altough rather abstract. In 1998 Braunstein and Kimble brought forward a continuous variable teleportation protocol based on quantum optics, using squeezed light as an EPR resource [9]. In this chapter will first show how squeezed light can be used as an EPR resource, then explore the protocol of Braunstein and Kimble before we survey, if this protcol is suitable for our purposes of teleporting single photons.

## 4.1 Squeezed light as an EPR resource

Squeezed light was discussed in the previous chapter and we will now use two beams of squeezed light to create a EPR resource. The idea is to cross the two beams via a 50/50 beam splitter where the squeezing of the input beams are in conjugate quadratures, i.e. one beam is squeezed in the X quadrature, the other one in the Y quadrature. The entanglement is then created because squeezing reduces the noise in one quadrature on cost of the other, meaning that only one of the input beams is responsible for only one of the quadrature noises of the output field. Even though the beams at the output of the beam splitter do have noise in both quadratures, they come from adding or subtracting both of the squeezed input fields. Therefore the relation of the quadratures of the output beams is determined by the relation of the two input fields. Because this relation is given by the beam splitter, measuring the quadratures of one of the ouput beams gives the quadratures of the other, thus the output beams form an entangled state.
To explain the entanglement more detailed we start out with the fields (in form of eq. (3.7) ) for two beams of squeezed light created via degenerate down conversion in a cavity (see section 3.3)

$$X_{sq} = \sqrt{2\gamma_s}\,\hat{a} + \xi_a^t, \qquad Y_{sq} = \sqrt{2\gamma_s}\,\hat{b} + \xi_b^t \tag{4.1}$$

where $\gamma_s$ stands for the halfwidth of the cavity and $X_{sq}$ ($Y_{sq}$) is squeezed in the X quadrature (Y quadrature). Note that this means that $X_{sq}$ ($Y_{sq}$) has strong fluctutations in the Y quadrature

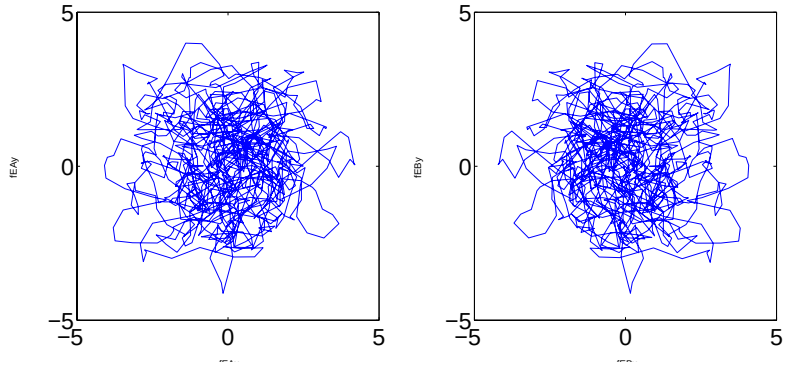


Figure 4.1: Simulated fluctuations of the two beams of entangeld light; LHS: quadrature plot of $\mathcal{E}_A$, RHS: quadrature plot of $\mathcal{E}_B$

(X quadrature). Both fields are squeezed by the same amount, characterized by the squeezing parameter $\lambda$. Crossing these fields with a 50/50 beam splitter gives the following EPR fields

$$\mathcal{E}_A = \frac{1}{\sqrt{2}}\,(X_{sq} + Y_{sq}), \qquad \mathcal{E}_B = \frac{1}{\sqrt{2}}\,(X_{sq} - Y_{sq}) \tag{4.2}$$

For perfect sqeezing the contributions to the Y quadrature of the output field $\mathcal{E}^Y_{A,B}$ solely come from the field squeezed in the X quadrature $X_{sq}$ and the contribution to $\mathcal{E}^X_{A,B}$ solely from $Y_{sq}$. With equation (4.2) the relations between the quadratures of the two fields are then given by

$$\mathcal{E}^X_A = -\mathcal{E}^X_B, \qquad \mathcal{E}^Y_A = \mathcal{E}^Y_B \tag{4.3}$$

Now it is clear that the two fields $\mathcal{E}_A$ and $\mathcal{E}_B$ form an EPR resource because the measurement of the quadrature of one field yields to the quadrature of the others. In fact the fields are an example of the entangled states that Einstein, Podolsky and Rosen used originally.

Note that equation (4.3) only holds for perfect squeezing (i.e. $\lambda = 1$). The lesser the squeezing gets, the weaker the entanglement becomes, because for weaker squeezing the quadratures of the output do not solely consist of the contributions of one of the input fields anymore, but are now dependent on both fields. That means, that the squeezing parameter $\lambda$ does not only describe the squeezing but also gives a measure for the entanglement. A picture of the fluctuation of the two entangled beams can be seen in figure 4.1. At first sight the two beams look light random noise, but in fact one is just a mirrored copy of the other according to equation (4.3) and therefore they are highly entangled. The entanglement can also be seen in figure 4.2, where figure 4.1 is 'disensembled' into the graph of $\mathcal{E}^X_B$ over $\mathcal{E}^X_A$ (left) and $\mathcal{E}^Y_B$ over $\mathcal{E}^Y_A$ (right) and shows clearly that $\mathcal{E}_A$ and $\mathcal{E}_B$ obey equation (4.3). A nice and more intuitive approach to squeezing can be found in [17].

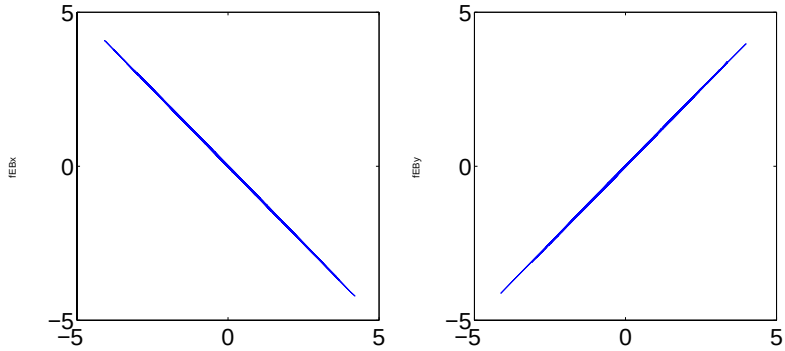


Figure 4.2: Simulated fluctuations of the two beams of entangeld light; LHS: $\mathcal{E}_B^X$ over $\mathcal{E}_A^X$, RHS:$\mathcal{E}_B^Y$ over $\mathcal{E}_A^Y$

## 4.2 The protocol

With the creation of an EPR resource of continuous variables in the previous section, we have laid the foundation for the continuous variable teleportation protocol. We will develope this protocol now, closely following the paper of Braunstein and Kimble [9] and Noh [18]. In principle this protocol uses the same five steps as Bennett's protocol, except that steps 2 and 3 - the mixing of the input with Alice's EPR share and the measurement of the joint state - have to be performed sperately (see section 2.2). The mixing of the input field $\mathcal{E}_c$ with $\mathcal{E}_a$ is done by a 50/50 beamsplitter, yielding to the two joint fields

$$\mathcal{E}_d = \frac{1}{\sqrt{2}}\left(\mathcal{E}_c + \mathcal{E}_a\right), \qquad \mathcal{E}_e = \frac{1}{\sqrt{2}}\left(\mathcal{E}_c - \mathcal{E}_a\right) \tag{4.4}$$

Now switching to the Wigner representation, the Wigner function for the total system before the mixing can be written as

$$W_{tot}(\mathcal{E}_c^X, \mathcal{E}_c^Y, \mathcal{E}_a^X, \mathcal{E}_a^Y, \mathcal{E}_b^X, \mathcal{E}_b^Y) = W_{in}(\mathcal{E}_c^X, \mathcal{E}_c^Y)\, W_{EPR}(\mathcal{E}_a^X, \mathcal{E}_a^Y, \mathcal{E}_b^X, \mathcal{E}_b^Y) \tag{4.5}$$

where the Wigner function for the EPR resource can be found in [8], with $r$ as a squeezing parameter (compare 3.5)

$$\begin{aligned} &W_{EPR}(\mathcal{E}_a^X, \mathcal{E}_a^Y, \mathcal{E}_b^X, \mathcal{E}_b^Y) = \\ &\quad \frac{4}{\pi}\exp\left[-e^{-2r}\left[(\mathcal{E}_a^X - \mathcal{E}_b^X)^2 + (\mathcal{E}_a^Y + \mathcal{E}_b^Y)^2\right] - e^{+2r}\left[(\mathcal{E}_a^X + \mathcal{E}_b^X)^2 + (\mathcal{E}_a^Y - \mathcal{E}_b^Y)^2\right]\right] \end{aligned} \tag{4.6}$$

After the measurement, i.e. after applying equation (4.4) to equation (4.5), the total Wigner function looks like

$$\begin{aligned} &W_{tot}(\mathcal{E}_d^X, \mathcal{E}_d^Y, \mathcal{E}_e^X, \mathcal{E}_e^Y, \mathcal{E}_b^X, \mathcal{E}_b^Y) = \\ &\quad W_{in}\left(\frac{1}{\sqrt{2}}\left(\mathcal{E}_d^X + \mathcal{E}_e^X\right), \frac{1}{\sqrt{2}}\left(\mathcal{E}_d^Y + \mathcal{E}_e^Y\right)\right) \times \\ &\quad W_{EPR}\left(\frac{1}{\sqrt{2}}\left(\mathcal{E}_d^X - \mathcal{E}_e^X\right), \frac{1}{\sqrt{2}}\left(\mathcal{E}_d^Y - \mathcal{E}_e^Y\right), \mathcal{E}_b^X, \mathcal{E}_b^Y\right) \end{aligned} \tag{4.7}$$

Then Alice performs her quadrature measurements via balanced homodyne detection, measuring the X quadrature of $\mathcal{E}_d$ and the Y quadrature of $\mathcal{E}_e$, giving the results $x_d$ and $y_e$, respectively. She then passes this information onto Bob. In the Wigner representation the measurement process is performed by subsituting $\mathcal{E}_d^X$ with $x_d$ and $\mathcal{E}_e^Y$ with $y_e$, then integrating over the unmeasured quadratures $\mathcal{E}_d^Y$ and $\mathcal{E}_e^X$. In order to express the integration, we make use of the complex Gaussians of the form

$$G_\sigma(\alpha) = \frac{1}{\pi\sigma} \exp\left[\frac{-|\alpha|^2}{\sigma}\right], \tag{4.8}$$

where we introduced a shorthand notation for the quadratures: $\alpha_j = \mathcal{E}_j^X + i\,\mathcal{E}_j^Y$. Now the Wigner function for the total system after the measurement can be written in terms of Bob's field and Alice's results as

$$W'_{tot}(\alpha_b) = 4N\, G_\nu(\alpha_b) \int \mathrm{d}^2\alpha_c\, W_{in}(\alpha_c)\;\; G_\tau\Big(\sqrt{2}(x_d = iy_e) + \tanh(2r)\alpha_b - \alpha_c\Big), \tag{4.9}$$

where $\nu = \cosh(2r)/2$, $\tau = 1/2\cosh(2r)$ and $N$ represents a normalization constant.
For perfect squeezing ($r \to \infty$). The Gaussian $G_\tau$ becomes a delta function because $\tanh(2r) \to 1$ and $\tau \to 0$ and the Gaussian $G_\nu$ describes a broad background state, which we can neglect. All of that leads to the following total Wigner function

$$W'_{tot} = 4N\; W_{in}(\alpha_b + \sqrt{2}(x_d + i\, y_e)). \tag{4.10}$$

If Bob then displaces his field on behalf of Alice's measurement results by $-\sqrt{2}(x_d + i\, y_e)$ he ends up with the input state in his hand

$$W_{out}(\alpha_b) = W'_{tot}(\alpha_b - \sqrt{2}(x_d + i\, y_e)) = W_{in}(\alpha_b), \tag{4.11}$$

So this protocol is able to teleport continuous variables by means of two beams of squeezed light as an EPR resource. The necessary steps are quite similar to those of Bennett's protcol and can be summarized to

1. Alice and Bob share an EPR resource in form of two entangled light beams
2. Alice creates a mixed state of her input field and her part of the EPR share by passing them through a 50/50 beam splitter
3. Alice measures the quadrature of the two joint fields
4. Alice transfers her measurement results to Bob

5. Bob transforms a displacment based on Alice's results on his beam of the EPR resource and receives the input field

The above protocol is a single-mode version of continuous variable teleportation (in this case for the Wigner function), but relies on mode-matching of all envolved fields. A broadband version has been put forward bei van Loock *et al.* and will be discussed in the upcoming chapter. But for now we will stick to this protocol and test it with a one photon input.

## 4.3 Teleportation of a single photon

### 4.3.1 Derivation of the output Wigner function

Having derived a teleportation protocol for continuous variables like the Wigner function, we now want to put it to the test, if it suits our purposes of teleporting a single photon. Our tests will be of purely graphical nature, as we do not need to use the results for further calculation. So far we are only interested in proof of concept.
In order to test the protocol, we need the Wigner function of a single photon, i.e. a Fock state. In general the Wigner function of a Fock state is given by (compare with Noh [18], p.83)

$$W_l(X,Y) = \frac{2}{\pi}\frac{1}{l!}\exp\left[-2(X^2+Y^2)\right]\sum_{k=0}^{l}(-1)^{l-k}\,\frac{l!}{k!\,(l-k)!}\frac{l!}{k!}\,4^k(X^2+Y^2)^k, \tag{4.12}$$

where $l$ is the number of photons. In our case of a single photon $l = 1$ and equation (4.12) then simplifies to our input state:

$$W_{in}(\mathcal{E}_c^X,\mathcal{E}_c^Y) = -\frac{2}{\pi}\,e^{-2(\mathcal{E}_c^{X\,2}+\mathcal{E}_c^{Y\,2})}\,\left[1-4\,(\mathcal{E}_c^{X\,2}+\mathcal{E}_c^{Y\,2})\right]. \tag{4.13}$$

Having defined our input state we can use equation (4.9) in order to calculate our the total Wigner function after the measurement. We will skip the necessary calculations as they can be found in the Appendix to [18] and just quote the result of

$$W_{tot}(\mathcal{E}_b^X,\mathcal{E}_b^Y) = N\,\exp\left[\frac{-2\,(\mathcal{E}_c^{X\,2}+\mathcal{E}_c^{Y\,2})}{A}\right]\,\exp\left[\frac{-2AB^2}{1+A}\right]\,\frac{1-A^2+4A^2B}{(1+A)^3}, \tag{4.14}$$

where $A = \cosh(2r)$ and $B^2 = [\sqrt{2}x_d + \mathcal{E}_b^X\,\tanh(2r)]^2 + [\sqrt{2}y_e + \mathcal{E}_b^Y\,\tanh(2r)]^2$. This Wigner function still has to be displaced by $-\sqrt{2}(x_d + i\,y_e)$ yielding to the desired output Wigner function of

$$\begin{aligned} &W_{out}(\mathcal{E}_b^X-\sqrt{2}x_d,\mathcal{E}_b^Y-\sqrt{2}y_e) = \\ &\quad N\exp\left[\frac{-2\,((\mathcal{E}_c^X-\sqrt{2}x_d)^2+(\mathcal{E}_c^Y-\sqrt{2}y_e)^2)}{A}\right]\,\exp\left[\frac{-2AB^2}{1+A}\right]\,\frac{1-A^2+4A^2B}{(1+A)^3}, \end{aligned} \tag{4.15}$$

with the same $A$ as above but a simpler $B = [\mathcal{E}_b^X\,\tanh(2r)]^2 + [\mathcal{E}_b^Y\,\tanh(2r)]^2$.

### 4.3.2 Results of the teleportation of one photon

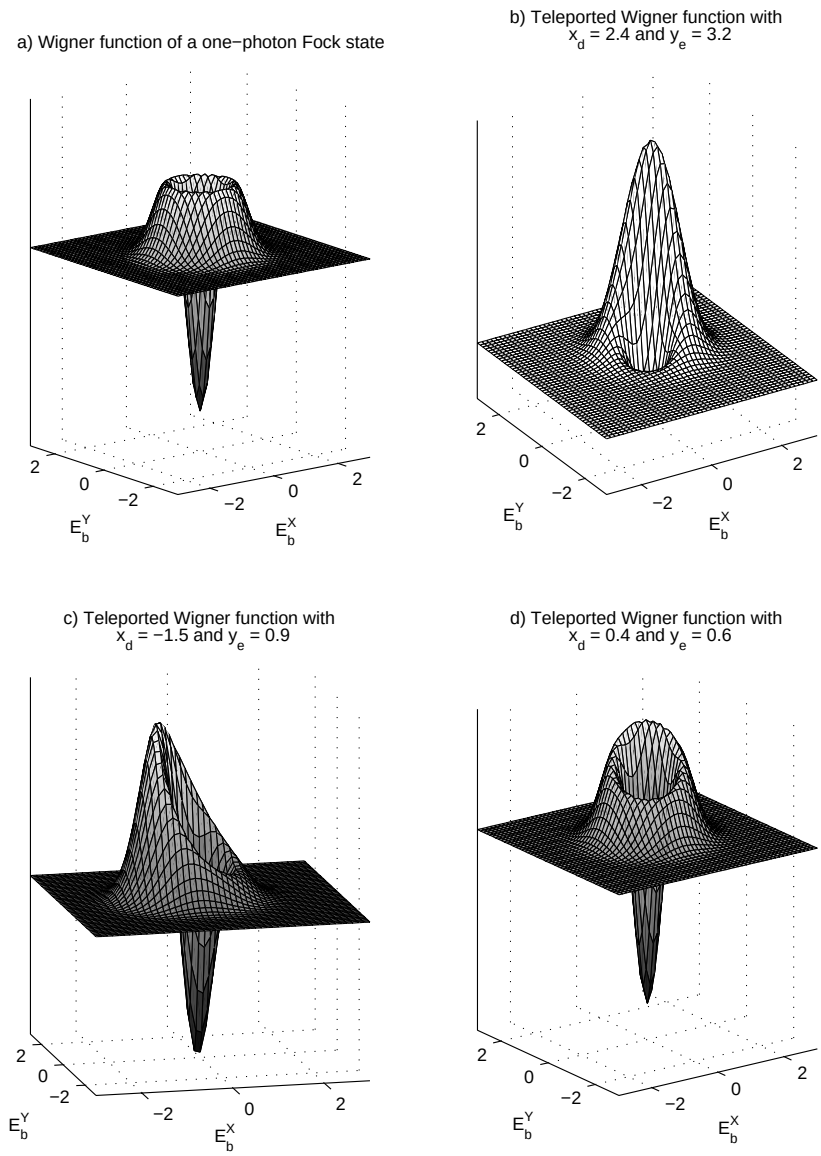


Figure 4.3: Wigner functions of teleported one photon Fock states with $\lambda = 1.3$. a) Input Wigner function b),c),d)teleported Wigner functions

Figure 4.3 shows three telported Wigner functions b), c) and d) with different $x_d$ and $y_e$, i.e. different results of Alice's measurement, for an arbitrary value of $\lambda = 1.3$. They are computed with equation (4.15) and compared to the input Wigner function a) of a one photon Fock state. As we excpet for the output to look just like the input, one can easily see that the teleportation gets better the smaller the values of $x_d$ and $y_e$ become. So how can we influence $x_d$ and $y_e$ in

order to achieve better teleportation?
The answer is, that we cannot. $x_d$ and $y_e$ are random variables due to the noise of the squeezed light. But because Alice measures quadratures, $x_d$ and $y_e$ depend on each other and are not complete random. In fact we can work out a probability distribution for $x_d$ and $y_e$ making use of the same Wigner function we used to calculate the output(equation 4.7). To get to the desired probabilty distribution we have to integrate $\mathcal{E}_b^X$ and $\mathcal{E}_b^Y$ out, because Alice performs a local measurement, therefore her results do not depend on Bob's field. To simplify calculations we integrate over $\mathcal{E}_b^X$ and $\mathcal{E}_b^Y$ even before we introduce the input field, obtaining for $W_{EPR}$ the Gaussian distribution

$$\int \mathrm{d}\mathcal{E}_b^X \mathrm{d}\mathcal{E}_b^X \, W_{EPR} = \frac{2}{\pi \, \cosh(2r)} \, \exp\left[\frac{-2(\mathcal{E}_a^{X\,2} + \mathcal{E}_a^{Y\,2})}{\cosh(2r)}\right]. \tag{4.16}$$

Using that in equation (4.7) and integrating over the two quadratures that are not measured by Alice, we obtain for the probability distribution

$$\begin{aligned} P(x_d, y_e) = &\frac{2}{\pi \, \cosh(2r)} \times \\ &\times \int \mathrm{d}\mathcal{E}_d^Y \mathrm{d}\mathcal{E}_e^X \, W_{in}\left(\frac{1}{\sqrt{2}}\left(\mathcal{E}_d^X + \mathcal{E}_e^X\right), \frac{1}{\sqrt{2}}\left(\mathcal{E}_d^Y + \mathcal{E}_e^Y\right)\right) \exp\left[\frac{-2(\mathcal{E}_a^{X\,2} + \mathcal{E}_a^{Y\,2})}{\cosh(2r)}\right]. \end{aligned} \tag{4.17}$$

With our input Fock state for one photon (4.13) we arrive at the following probability distribution for $x_d$ and $y_e$

$$P(x_d, y_e) = \sqrt{x_d^2 + y_e^2} \, \frac{8N}{(1+\cosh(2r))^3} \, \left(-1 + \cosh(2r)^2 + 8\left(x_d^2 + y_e^2\right)\right) \exp\left[-4 \, \frac{(x_d^2 + y_e^2)}{1+\cosh(2r)}\right], \tag{4.18}$$

where $N$ is a normalizing constant. Obviously $P(x_d, y_e)$ depends only on the radial distance of $x_d$ and $y_e$ and can be written as a function of the radial probability $q = \sqrt{x_d^2 + y_e^2}$. Figure 4.4 shows the distribution $P(q)$ for three different squeezing paramteres. Unsurprisingly the peak of $P(q)$ moves to higher $q$ as $r$ increases, due to the fact that with increased squeezing the amplitudes in the unsqueezed quadratures grow yielding to bigger $x_d$ and $y_e$.

Now that we have found the proper distribution for $x_d$ and $y_e$, we can investigate the influence of the squeezing parameter $r$. Figure 4.6 shows three output wigner functions for different magnitudes of squeezing, where $x_d$ and $y_e$ are choosen randomly out of their probability distribution (4.18).

Again it is just what we expected. The quality of teleportation increases with the magnitude of squeezing. This makes perfect sense, since the the stronger the squeezing is, the bigger the magnitude of the enganglement between the light beams that Alice and Bob share becomes. With a squeezing parameter of $r = 3.1$ the teleported Wigner function is already very similiar to the Wigner function of a one photon Fock state, meaning that it is possible to teleport single photons with this protocol.

Note that for many teleportation attempts the averaged output Wigner function approximates the input Wigner function, even for small values of $r$. The quality of the approximation rises with the number of attempts made. This is illustrated for a teleportation with a squeezing parameter $r = 0.9$ in figure 4.5 and we have seen an example of the out put of a single teleportation attempt in figure 4.6. The obtained Wigner function is very similar to the input one even though the

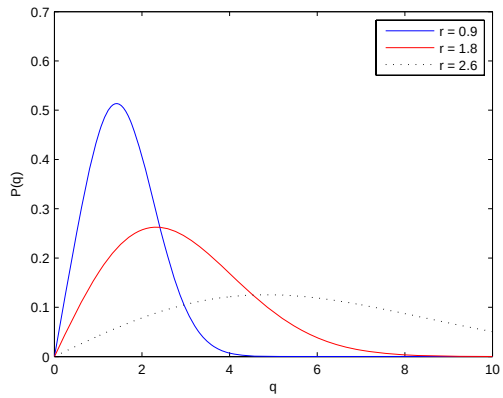


Figure 4.4: Probability Distribution of Alice's measurements for different values of squeezing, $q = \sqrt{x_d^2 + y_e^2}$

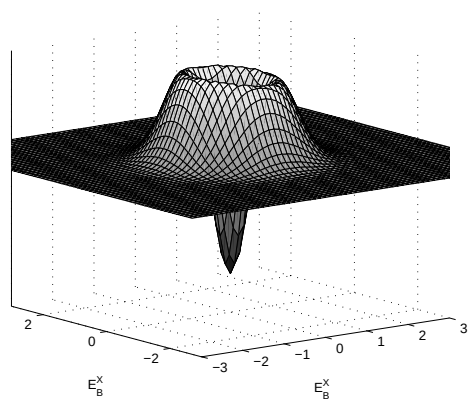

Figure 4.5: Averaged output Wigner function of 1000 teleportation attempts at $r = 0.9$

squeezing is fairly week. Because of the week squeezing the light beams are just weakly entangled and therefore information about the input state is lost. Thus it is not possible to reconsruct the input field at the output at the first attempt, but all information about the input field is eventually passed on with rising number of attempts.

### 4.3.3 Suitability for telporting single photons

In the previous section we discussed the results of the teleportation of one photon using the continuous variable teleportation protocol proposed by Braunstein and Kimble. We have seen that it is possible to teleport a single photon quite well and the magnitude of squeezing controls the quality of the teleportation. Thus the continuous variable teleportation protocol is suitable for our purposes to teleport streams of single photons. However, this protocol has its flaws that limit its usability. The input was a Fock state, i.e. a single mode field, which is very hard to realise experiementially. So more general form of teleportation is needed, which is capable of teleporting a broadband input. We will discuss such a protocol in the next chapter.

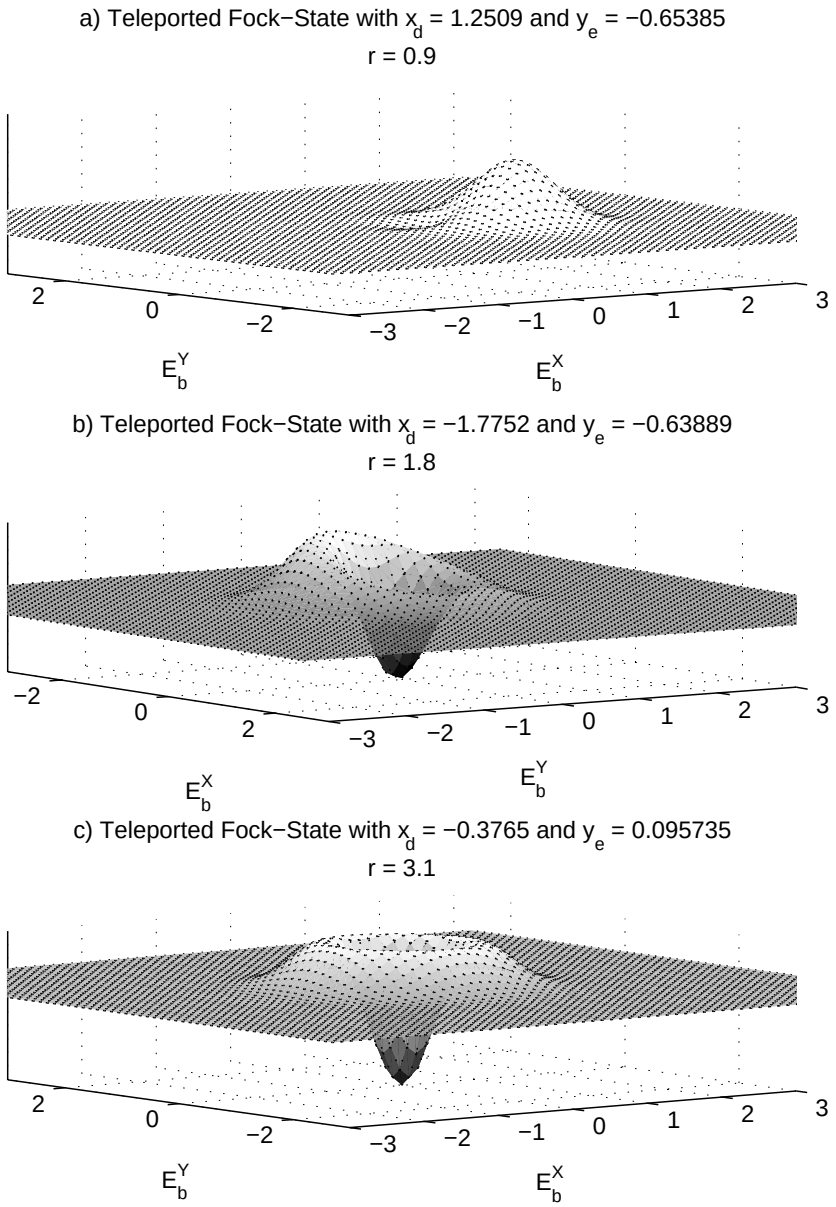


Figure 4.6: Output Wigner functions for different $r$ and randomly chosen $x_d$ and $y_e$

# Chapter 5

# Broadband teleportation

So far we have been dealing with single mode fields as input fields. In this chapter we will expand the protocol of the previous chapter to broadband fields and we will introduce filters in order to recover all statistical properties of the field. The derivation presented here is based on a paper of van Loock *et al.* [11] but closely follows the works of Noh [1], [12].
The protocol will be put to use with an input field originating from a decaying photon in a cavity. In order to evaluate the quality of the teleportation of the input, we will also have to think about how to measure the accordance of the output field and the input field quantitativly, which we will do in the next chapter.

## 5.1 The Broadband Teleportation protocol

### 5.1.1 The Basic Protocol

The teleportation protocol for broadband teleportation is essentially the same as for single mode teleportation in the previous chapter. A schematic sketch of the setup can be found in figure 5.1. Alice and Bob share two beams of entangled squeezed light as an EPR resource. Alice crosses the in input field with her share of the EPR resource via a 50/50 beamsplitter and then measures the quadratures. After the measurement she passes her measurement outcomes on to Bob, who displaces his field accordingly and recieves the output field. But as we are dealing with broadband fields now, filtering becomes part of the protocol and the relation between the bandwidth of the fields will play an important role. The complete protocol reads as follows and involes seven steps

1. Alice and Bob share an EPR resource in form of two entangled light beams, which are squeezed over a bandwidth of $2\gamma_s$
2. Alice creates a mixed state of her input field (with bandwidth $2\gamma_i$) and her part of the EPR resource by passing them through a 50/50 beam splitter
3. Alice measures the quadrature of the two joint fields

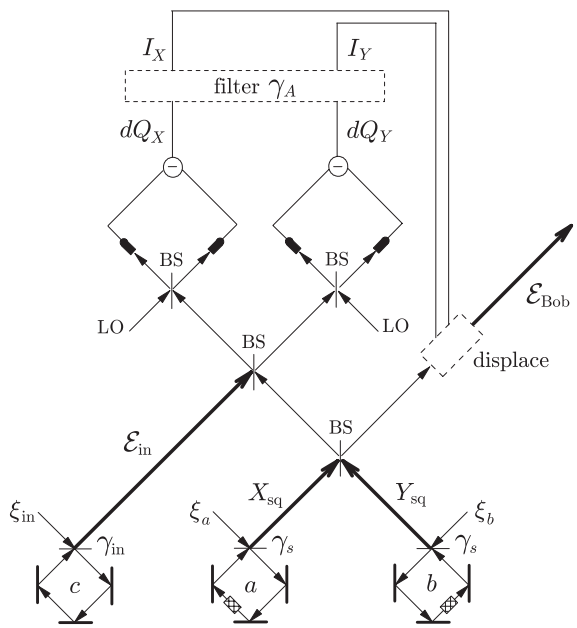


Figure 5.1: Schematic sketch of the teleporting protocol without filtering by Bob; BS: 50/50 beamsplitter; BHD: balanced homodyne detector

4. Alice filters her results with a filter of bandwith $2\gamma_A$
5. Alice transfers her measurement results to Bob
6. Bob transforms a displacment based on Alice's results on his beam of the EPR resource
7. Bob filters the displaced field with a filter of bandwidth $2\gamma_B$ and receives the input field

Note that the $\gamma_i$'s above are all halfwidth.
At this point we can already make a few assumptions towarding the relation between the bandwidthes by looking at figure 5.2, which shows a schematic sketch of the spectrum of the output field. First of all, as the entanglement is provided by the squeezing and we do not want to 'loose' entanglement, Alice's filter bandwidth has to be greater than the squeezing bandwidth. Otherwise the information send from Alice to Bob would not be sufficient because of missing information about Alice's share of the EPR resource. Therefore $\gamma_A > \gamma_s$. Then we take into consideration that the frequencies of the EPR field outside of the squeezing bandwidth just contribute noise and that they should be filtered out by Bob. That gives $\gamma_s > \gamma_B$. At last the bandwidth of the input field has to be small compared to that of the squeezing in order for the teleportation to work, so that the peak of the input signal lies within the 'valley' created by the squeezing. The input signal also has to pass through Bob's filter in order to give the input field at the output of the teleporter. Thus $\gamma_B > \gamma_i$. In practise we have to allow frequency roll offs for the filters so that all the above relations are supposed to be in order of magnitude. Altogether we obtain as the basic relation between the bandwidthes

$$\gamma_A \gg \gamma_s \gg \gamma_B \gg \gamma_i. \tag{5.1}$$

Keeping the bandwidth relations in mind, we will now proceed to the actual protocol. Other than

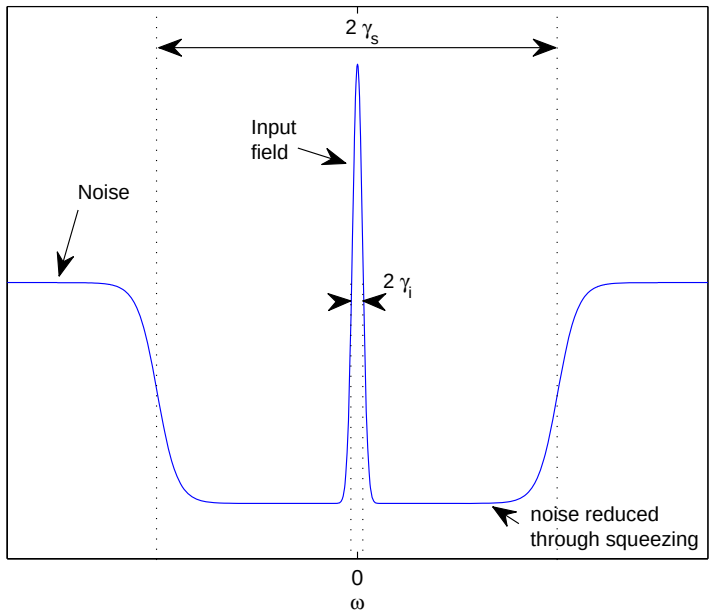


Figure 5.2: Averaged output Wigner function of 1000 teleportation attempts at $r = 0.9$

in chapter 4 our calculations will be in the Heisenberg picture. Starting out with the three given fields in the form of equation (3.7) we write for the input field $\hat{\mathcal{E}}_{in}(t)$, and the field squeezed in the X quadrature (Y quadrature) $\hat{X}(t)$ ($\hat{Y}(t)$)

$$\begin{aligned} \hat{\mathcal{E}}_{in}(t) &= \sqrt{2\gamma_i}\,\hat{c}(t) + \xi_c^t \\ \hat{X}(t) &= \sqrt{2\gamma_s}\,\hat{a}(t) + \xi_a^t \\ \text{and} \qquad \hat{Y}(t) &= \sqrt{2\gamma_s}\,\hat{b}(t) + \xi_b^t. \end{aligned} \tag{5.2}$$

The fields $\hat{X}(t)$ and $\hat{Y}(t)$ are output fields of a degenerate parametric amplifier in a cavity as discussed in section 3.3 and are entangled via a 50/50. Alice and Bob receive the entangled fields

$$\hat{A} = \frac{1}{\sqrt{2}}\left(\hat{X} + \hat{Y}\right), \qquad \hat{B} = \frac{1}{\sqrt{2}}\left(\hat{X} - \hat{Y}\right). \tag{5.3}$$

Then Alice crosses her share of the EPR resource with the input field and receives the two fields

$$\hat{\mathcal{E}}_{A1} = \frac{1}{\sqrt{2}}\left(\hat{\mathcal{E}}_{in} + \hat{A}\right), \qquad \hat{\mathcal{E}}_{A2} = \frac{1}{\sqrt{2}}\left(\mathcal{E}_{in} - \hat{A}\right). \tag{5.4}$$

She proceeds by measuring the X quadrature of $\hat{\mathcal{E}}_{A1}$ and the Y quadrature of $\hat{\mathcal{E}}_{A2}$, filters her photo currents - denoted by a convolution of her measurement results with the impulse response of her filter $F_a(t)$ and passes the output of the filter on to Bob. The information sent from Alice to Bob can be written as

$$F_a(t) * \left[\frac{1}{\sqrt{2}}\left(\hat{\mathcal{E}}_{in}^X + \hat{A}^X\right) + i\,\frac{1}{\sqrt{2}}\left(\hat{\mathcal{E}}_{in}^Y - \hat{A}^Y\right)\right], \tag{5.5}$$

where $*$ denotes the convolution. Because Alice's filtering bandwith has to be the largest of the bandwidthes according to the bandwith relation (5.1), we can set $\gamma_s \to \infty$ meaning that Alice does not filter at all. With $\gamma_s \to \infty$, $F_a(t) \to \delta(t)$ and the classical information is just the part at the right hand side of the asterisk in expression (5.5).
Based on this information Bob performs a displacment on his share of the EPR resource (compare to equation (4.11)) and obtains the field

$$\begin{aligned}\hat{\mathcal{E}}_{Bob} &= \hat{B} + \sqrt{2}\left[\frac{1}{\sqrt{2}}\left(\hat{\mathcal{E}}_{in}^X + \hat{A}^X\right) + i\,\frac{1}{\sqrt{2}}\left(\hat{\mathcal{E}}_{in}^Y - \hat{A}^Y\right)\right] \\ &= \hat{B} + \hat{\mathcal{E}}_{in} + \hat{A}^* \\ &= \hat{\mathcal{E}}_{in} + \sqrt{2}\left(\hat{X}^X - i\,\hat{Y}^Y\right). \end{aligned} \tag{5.6}$$

So Bob ends up with the input field on top of some background given by $\sqrt{2}\left(\hat{X}^X - i\,\hat{Y}^Y\right)$. But the background can be reduced by increasing the squeezing and with perferct squeezing - meaning $\hat{X}^X$, $\hat{Y}^Y \to 0$ - Bob receives the input field and therefore achieves perfect teleportation. This shows that the protocol is working and that Bob's filtering is only needed to increase the quality of teleportation for finite squeezing.

### 5.1.2 Filtering of Bob's field

After the displacement by Bob the field can also be filtered in order to reduce the noise from the EPR resource. It is usually done with a two sided cavity. The output field of the teleporter $\hat{\mathcal{E}}_{out}$ (i.e. after Bob's filtering) can be written as

$$\hat{\mathcal{E}}_{out} = F_B * \left(\hat{\mathcal{E}}_{Bob} + \xi_{out}^t\right) - \xi_{out}^t, \tag{5.7}$$

where $F_B$ is the impulse response of Bob's filter and $\xi_{out}^t$ denotes the vacuum fluctuations. The fluctuations appear here twice, because they mix with Bob's field at the input of the filter and then again at the output semi transparrent mirror of the filter. But they vanish as soon as correlation functions are calculated and are therefore not taken into account (compare with section 3.3.2). With $F_B(t) = \gamma_B\ \exp(-\gamma_B\, t)$ equation (5.7) becomes

$$\hat{\mathcal{E}}_{out}(t) = \gamma_B \int_0^t \mathrm{d}t' e^{-\gamma_B\,(t-t')}\left[\hat{\mathcal{E}}_{in} + \sqrt{2}\left(\hat{X}^X - i\,\hat{Y}^Y\right)\right]. \tag{5.8}$$

Furthermore

$$\begin{aligned}&\langle\sqrt{2}\left(\hat{X}^X - i\hat{Y}^Y\right)^\dagger\ \sqrt{2}\left(\hat{X}^X - i\hat{Y}^Y\right)\rangle \\ &\quad = 2\langle X^{X\dagger}X^X - iX^{X^\dagger}Y^Y + iY^{Y\dagger}X^X + Y^{Y\dagger}Y^Y\rangle \\ &\quad = 4\langle X^{X\dagger}X^X\rangle, \end{aligned} \tag{5.9}$$

because $X^X = Y^Y$ due to the fact, that both fields are squeezed with the same magnitude. Computing the correlation functions from equation (5.8), using equation (5.9) and splitting the

integral into two parts - one originating from the input, the other from the EPR resource - gives

$$\begin{aligned}
&\langle \hat{\mathcal{E}}^{\dagger}_{out}(t')\, \hat{\mathcal{E}}_{out}(t'')\rangle = \\
&\quad = \gamma_B^2 \int_0^{t'} \mathrm{d}t' \int_0^{t''} \mathrm{d}t''\, e^{\gamma_B\,(t'-\tau'+t''-\tau'')}\, \langle \mathcal{E}^{\dagger}_{in}(\tau')\, \mathcal{E}_{in}(\tau'')\rangle \qquad \text{Integral I} \\
&\quad +4\,\gamma_B^2 \int_0^{t'} \mathrm{d}t' \int_0^{t''} \mathrm{d}t''\, e^{\gamma_B\,(t'-\tau'+t''-\tau'')}\, \langle X^{X\dagger}(\tau')\, X^X(\tau'')\rangle \qquad \text{Integral II}
\end{aligned} \tag{5.10}$$

Integral I only depends on the input field an will be treated in the next section. Before solving Integral II however, an expression for the correlation function of $\hat{X}^X$ is needed. Using the definition of the quadratures (3.10) the correlation function becomes

$$\langle X^{X\dagger}(t')\, X^X(t'')\rangle = \frac{1}{4}\langle (\hat{a}+\hat{a}^{\dagger})\,(\hat{a}+\hat{a}^{\dagger})\rangle, \tag{5.11}$$

with $\hat{a} = \sqrt{2\gamma_s}\hat{a}_c + \xi_a^t$ the output field of the squeezing cavity. Note that $\hat{a}_c$ is the same creation operator as used in the derivation of squeezed light in section 3.3.2. The calculation of $\langle X^{X\dagger}(t')\, X^X(t'')\rangle$ is quite lengthy as it involves 16 terms and will be skipped at this point but can be found in the Appendix A.1. The result is

$$\langle X^{X\dagger}(t')\, X^X(t'')\rangle = \gamma_s\left[\langle \hat{a}_c(t')\hat{a}_c(t'')\rangle + \langle \hat{a}_c^{\dagger}(t')\hat{a}_c(t'')\rangle\right] + \frac{1}{4}\,\delta(t'-t''), \tag{5.12}$$

where $\delta(x)$ is the Dirac $\delta$-function and $\hat{a}_c$ denotes the intracavity field. As the correlation functions for the intracavity field have already been devised in section 3.3.2, equation (3.30), equation (5.12) can be written explicitly as

$$\langle X^{X\dagger}(t')\, X^X(t'')\rangle = -\frac{\gamma_s}{2}\frac{\lambda}{1+\lambda}\, e^{-\gamma_s(1+\lambda)|t'-t''|} + \frac{1}{4}\,\delta(t'-t''). \tag{5.13}$$

and with that the Integral II of equation (5.10) becomes

$$\begin{aligned}
&4\,\gamma_B^2 \int_0^{t'} \mathrm{d}t' \int_0^{t''} \mathrm{d}t''\, e^{\gamma_B\,(t'-\tau'+t''-\tau'')}\, \langle X^{X\dagger}(\tau')\, X^X(\tau'')\rangle \\
&\quad = 4\,\gamma_B^2 \int_0^{t'} \mathrm{d}t' \int_0^{t''} \mathrm{d}t''\, e^{\gamma_B\,(t'-\tau'+t''-\tau'')}\, \left[-\frac{\gamma_s}{2}\frac{\lambda}{1+\lambda}\, e^{-\gamma_s(1+\lambda)|t'-t''|} + \frac{1}{4}\delta(\tau'-\tau'')\right],
\end{aligned} \tag{5.14}$$

Again, this is an integral over a sum and can therefore been split up. The term involving the $\delta$-function gives

$$\frac{\gamma_B}{2}\left[e^{-\gamma_B\,|t'-t''|} - e^{-\gamma_B\,(t'+t'')}\right], \tag{5.15}$$

where the modulus originates in the evaluation of the $\delta$-function for the two cases $\tau' > \tau''$ and $\tau' < \tau''$. The term involving the exponentials has to be split up into two parts because of the modulus. However the two parts differ only in the interchange of $\tau'$ and $\tau''$, so we will only give

one part and abbreviate the other with $(\tau' \leftrightarrow \tau'')$

$$-2\gamma_B^2\gamma_s\frac{\lambda}{1+\lambda}\,e^{-\gamma_B\,(t'+t'')}\left[\int_0^{t'}\mathrm{d}t'\int_0^{t''}\mathrm{d}t''e^{\gamma_B(\tau'+\tau'')}\,e^{-\gamma_B(1+\lambda)(\tau'-\tau'')}+(\tau'\leftrightarrow\tau'')\right] \tag{5.16}$$

$$\begin{aligned} &= -\frac{2\gamma_B^2\gamma_s}{\gamma_B+\gamma_S(1+\lambda)}\frac{\lambda}{1+\lambda}\,e^{-\gamma_B\,(t'+t'')}\left[\frac{1}{2\gamma_B}\left(e^{2\gamma_B\,t'}-1\right)-\frac{1}{\gamma_B-\gamma_s(1+\lambda)}\left(e^{[\gamma_B-\gamma_s(1+\lambda)\,t']}-1\right)\right.\\ &+ \left.\frac{1}{2\gamma_B}\left(e^{2\gamma_B\,t''}-1\right)-\frac{1}{\gamma_B-\gamma_s(1+\lambda)}\left(e^{[\gamma_B-\gamma_s(1+\lambda)\,t'']}-1\right)\right] \end{aligned} \tag{5.17}$$

The sum of equation (5.15) and (5.17) give the correlation function of the EPR resource part of $\langle\hat{\mathcal{E}}_{out}^\dagger(t')\,\hat{\mathcal{E}}_{out}(t'')\rangle$, which we will denote $\langle\hat{\mathcal{E}}_{out}^\dagger\,\hat{\mathcal{E}}_{out}\rangle_{EPR}$ But for now only the photon flux is needed so that $t\equiv t'=t''$ can be used and because it is assumed that the source of the squeezed light was turned on long before the input reaches Alice the limit of $t\to\infty$ can be taken. With these two assumptions equations (5.15) and (5.17) give a constant noise background in the output field dependend on the squeezing bandwidth and Bob's filter bandwidth. So Integral II of equation (5.10) yields to

$$\begin{aligned} \langle\hat{\mathcal{E}}_{out}^\dagger\,\hat{\mathcal{E}}_{out}\rangle_{EPR} &= \frac{\gamma_B}{2}-\frac{2\gamma_B\gamma_s}{\gamma_B+\gamma_s(1+\lambda)}\frac{\lambda}{1+\lambda}\\ &= 2\gamma_B\left[\frac{1}{4}\left(\frac{1-\lambda}{1+\lambda}\right)^2+\frac{\lambda}{(1+\lambda)^2}\frac{\gamma_B}{\gamma_B+\gamma_s(1+\lambda)}\right]. \end{aligned} \tag{5.18}$$

It worthwhile having a short look at this expression. There are two parts that contribute to the background noise. The second part depends on the bandwitdthes and gets small for the assumption $\gamma_A \gg \gamma_B$ made in equation (5.1). The other term depends on the squeezing only and goes to $\gamma_B/8$ for prefect squeezing and describes this is the smallest possible background.
Note that for a constant input, Integral I of equation (5.10) collapses and just gives the constant photon flux in the long term limit, yielding to the following equation for the output photon flux of the teleporter for a constant input

$$\langle\hat{\mathcal{E}}_{out}^\dagger\,\hat{\mathcal{E}}_{out}\rangle_{const.}=\langle\hat{\mathcal{E}}_{in}^\dagger\,\hat{\mathcal{E}}_{in}\rangle+2\gamma_B\left[\frac{1}{4}\left(\frac{1-\lambda}{1+\lambda}\right)^2+\frac{\lambda}{(1+\lambda)^2}\frac{\gamma_B}{\gamma_B+\gamma_s(1+\lambda)}\right]. \tag{5.19}$$

## 5.2 Teleportation of a single photon

Having calculated the contribution of the EPR resource to the output photon flux (5.18), the protocol is now 'ready to use', meaning that only Integral I of equation (5.10) has to be solved for a given input correlation function. In this section the investigated input is the field emitted from a photon that decays from a cavity. In order to solve said Integral I, the correlation function is needed and will now be calculated.

### 5.2.1 Correlation function of a photon decaying in a cavity

The derivation of the correlation function of the decaying photon is done with use of the master equation. The master equation gives a equation of motion for the density matrix $\rho$ of a system. The derivation of the master equation can be found in standard textbooks like [19] and for the regarded case and in a rotation frame (according to equation (3.21) the master equation takes this simple form

$$\dot{\rho} = \gamma_i \left(2a\rho a^\dagger - a^\dagger a\rho - \rho a^\dagger a\right). \tag{5.20}$$

With use of the density matrix of a system, the expectation value of any operator can be written as the trace over the density matrix times the operator, like

$$\langle \mathcal{O} \rangle = \mathrm{tr}(\mathcal{O}\,\rho), \tag{5.21}$$

where $\mathcal{O}$ represents a general operator and tr() denotes the trace. With this relation and the master equation the time evolution of the operators of the photon $\hat{c}$ inside the cavity can be written as

$$\begin{aligned}
\frac{\mathrm{d}\langle \hat{c}^\dagger \hat{c}\rangle}{\mathrm{d}t} &= \frac{\mathrm{d}\; tr\left(\hat{c}^\dagger \hat{c}\rho\right)}{\mathrm{d}t} = tr\left(\hat{c}^\dagger \hat{c}\rho\right) \\
&= \gamma_i\, \mathrm{tr}\left(2\hat{c}^\dagger \hat{c}\,\hat{c}\rho\hat{c}^\dagger - \hat{c}^\dagger \hat{c}\,\hat{c}^\dagger \hat{c}\rho - \hat{c}^\dagger \hat{c}\rho\hat{c}^\dagger \hat{c}\right) \\
&= \gamma_i\, \mathrm{tr}(2(\hat{c}^\dagger)^2 \hat{c}^2\rho - 2(\hat{c}^\dagger \hat{c})^2\rho) \\
&= -2\gamma_i \langle \hat{c}^\dagger \hat{c}\rangle,
\end{aligned} \tag{5.22}$$

where the cyclic property of the trace has been used: $\mathrm{tr}(\hat{A}\hat{B}\hat{C}) = \mathrm{tr}(\hat{C}\hat{A}\hat{B}) = tr(\hat{B}\hat{C}\hat{A})$. This simple differential equation for $\langle \hat{c}^\dagger \hat{c}\rangle$ yields to

$$\langle \hat{c}^\dagger \hat{c}\rangle(t) = e^{-2\gamma_i\, t}. \tag{5.23}$$

Simliarly the expectation value of $\hat{c}$ is found to be

$$\langle \hat{c}\rangle(t) = c(0)\, e^{-\gamma_i\, t}, \tag{5.24}$$

out of

$$\langle \dot{\hat{c}}\rangle = -\gamma_i \langle \hat{c}\rangle, \tag{5.25}$$

Now the Quantum Regression Theorem can be used to obtain the desired correlation function. The theorem roughly states that if

$$\langle \dot{\hat{A}}\rangle = M\, \langle \hat{A}\rangle, \quad M = const., \tag{5.26}$$

the following holds for an arbitrary operator $\mathcal{O}$

$$\frac{\mathrm{d}}{\mathrm{d}\tau}\langle \hat{\mathcal{O}}(t)\, \hat{A}(t+\tau)\rangle = M\, \langle \hat{\mathcal{O}}(t)\, \hat{A}(t+\tau)\rangle. \tag{5.27}$$

Again, this is a very rough statement of the Quantum Regression Theorem. For a rigorous derivation and further reading see [19], Chapter 1. For the case treated here the following can be chosen

$$\hat{\mathcal{O}}(t) = \hat{c}^\dagger(t), \quad \hat{A}(t+\tau) = \hat{c} \quad , M = -\gamma_i, \tag{5.28}$$

where the value for $M$ is taken out of equation (5.25). With these values equation (5.27) becomes

$$\frac{\mathrm{d}}{\mathrm{d}\tau}\langle \hat{c}^\dagger(t)\, \hat{c}(t+\tau)\rangle = -\gamma_i\, \langle \hat{c}^\dagger(t)\, \hat{c}(t+\tau)\rangle, \tag{5.29}$$

which gives for the correlation function

$$\begin{aligned} \langle \hat{c}^\dagger(t)\hat{c}(t+\tau) &= \langle \hat{c}^\dagger(t)\hat{c}(t+0)\, e6{-}\gamma_i\, \tau\rangle\rangle \\ &= e^{-2\gamma_i\, t}\, e^{-\gamma_i\, \tau}, \end{aligned} \tag{5.30}$$

where the inital value $\langle \hat{c}^\dagger(t)\hat{c}(t+0)\rangle$ is obtained from equation (5.23)Because the operators $\hat{c}$ describe the field inside the cavity the desired correlation function is calculated with use of the equation for the input field (5.2) to

$$\langle \hat{\mathcal{E}}^\dagger_{in}(t')\, \hat{\mathcal{E}}_{in}(t'')\rangle = 2\, \gamma_i\, e^{-\gamma_i\, (t'+t'')}. \tag{5.31}$$

That is the desired correlation function for a field of a photon decaying in a cavity incident on the teleporter input.

### 5.2.2 Output photon flux

Having a defined input, the missing part of the output - besides the constant noise of the entangled beams - can be calculated. Namely Integral I of equation (5.10) that takes now the following form

$$\begin{aligned} &2\gamma_B^2\gamma_i \int_0^{t'} \mathrm{d}\tau' \int_0^{t'} \mathrm{d}\tau''\, e^{-\gamma_B\, (t'1-\tau'+t''-\tau'')}\, e^{-\gamma_i\, (\tau'+\tau'')} \\ &= \frac{2\gamma_i}{(1-\frac{\gamma_i}{\gamma_B})^2}\, \left(e^{-\gamma_i\, t'} - e^{-\gamma_B\, t'}\right)\, \left(e^{-\gamma_i\, t''} - e^{-\gamma_B\, t''}\right) \qquad (5.32) \\ &= \frac{2\gamma_i}{(1-\frac{\gamma_i}{\gamma_B})^2}\, \left(e^{-\gamma_i\, t} - e^{-\gamma_B\, t}\right)^2, \qquad \text{after setting } t \equiv t' = t''. \qquad (5.33) \end{aligned}$$

Putting the two parts of the equation (5.10)together - Integral I from above, Integral II from equation(5.18), an expression for the output photon flux is obtained

$$\langle \hat{\mathcal{E}}^\dagger_{out}\, \hat{\mathcal{E}}_{out}\rangle(t) = \frac{2\gamma_i}{(1-\frac{\gamma_i}{\gamma_B})^2}\, \left(e^{-\gamma_i\, t} - e^{-\gamma_B\, t}\right)^2 + 2\gamma_B \left[\frac{1}{4}\left(\frac{1-\lambda}{1+\lambda}\right)^2 + \frac{\lambda}{(1+\lambda)^2}\frac{\gamma_B}{\gamma_B+\gamma_s(1+\lambda)}\right]. \tag{5.34}$$

With an equation for the output photon flux at hand, it is possible to study the influences of the squeezing and different bandwidthes on the teleportation. Figure 5.3 shows the output photon flux as a function of time for three different values of $\lambda$. As expected the noise on which the peak of the decaying photon sits gets smaller with increasing magnitude of the squeezing. This is not

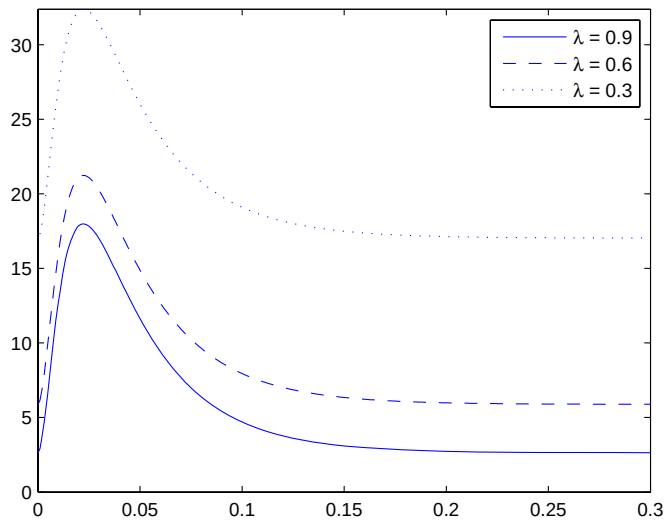


Figure 5.3: Output photon flux, varying $\lambda$; $\gamma_i = 15,\ \gamma_b = 100,\ \gamma_s = 1000$

suprising because the vacuum fluctuations of the squeezed light decrease with stronger squeezing (see equation (5.6)). The width of the peak of the input signal also gets smaller the better the squeezing is, indicating a better teleportation quality.

Now considering figure 5.4, which plots the photon flux and varyies $\gamma_B$ and $\gamma_s$ in a) and b), respectively. a) shows that for a decreasing bandwidth of Bob's filter, the noise decreases as well. This is just what is expected as the noise level throughout the squeezing bandwidth is constant and the smaller Bob chooses his bandwidth, the less noise he will pick up. However, with a smaller bandwith Bob is more likely to cut off frequency parts of the input signal and thus loose quality. That can be witnessed as a broadening of the input signal peak as Bob's bandwith gets closer to the input bandwidth. The same can be seen for the squeezing bandwidth in figure 5.4 b). The noise level rises with decreasing squeezing bandwidth, because as the squeezing bandwidth approaches the filter bandwidth, Bob will pick up noise from unsqueezed frequency that have much higher fluctuations.

Having seen the influences of the squeezing on the teleportation quality only qualitatively, one might want to have a measure for the quality of teleportation. Such a measure will be developed in the upcoming chapter.

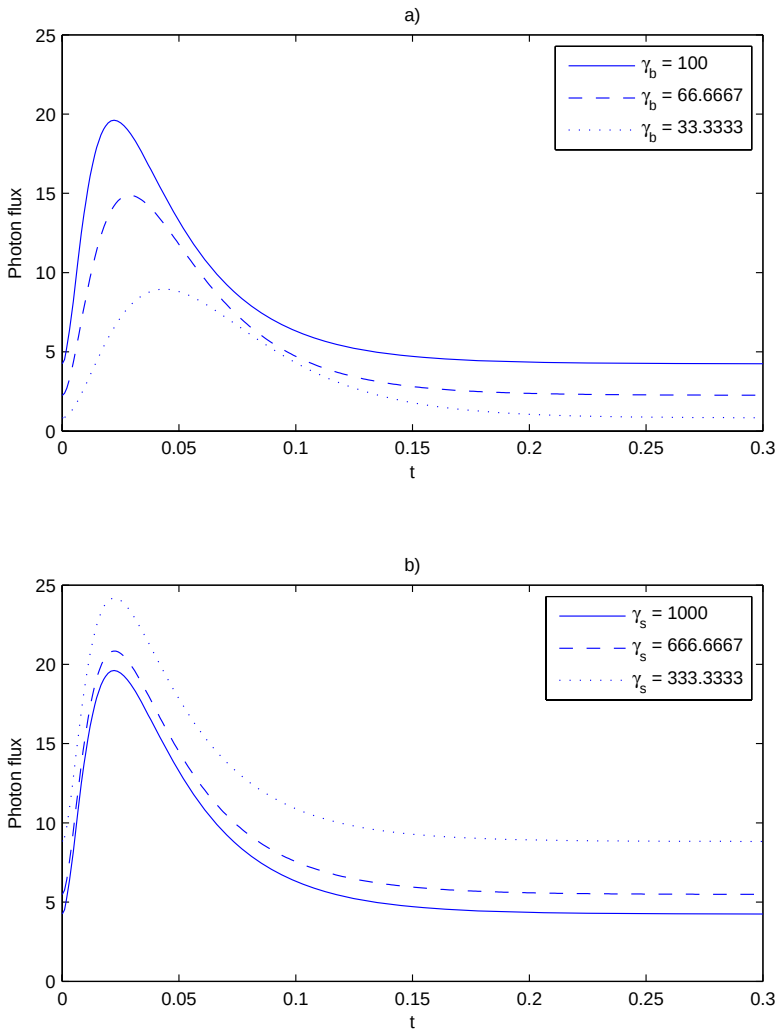


Figure 5.4: Output photon flux; varying a) $\gamma_B$ with $\gamma_s = 1000$; b) varying $\gamma_s$ with $\gamma_b = 100$; $\gamma_i = 15$, $\lambda = 0.7$

# Chapter 6

# Measuring the Teleportation Quality

Quantitatively, the influence of the different parameters of the protocol on the teleportation quality has been investigated in the last chapter. But one still lacks a quantitative measure for the quality, meaning a measure how well the output field mimicks the input field. A developement of such a measure shall be done in this chapter using a mode matched cavity with a time dependent damping constant $2\gamma_c(t)$ to 'catch' the peak of output signal. Such a cavity has been proposed by Parkins [2] to transfer quantum states between light fields and the motion of trapped atoms. Noh applies this to the simpler case of a photon that decays in one cavity and is caught in a second one (the one with the time dependent damping constant) [1].

## 6.1 Time dependence of the damping constant

As said before, a cavity after the output of the teleporter is used to measure the quality of teleportation. This catching cavity has a time dependent damping constant, that tends to zero over time in order to allow the output to enter the cavity but prevents it from decaying once in the cavity. The evaluation of the output can then be done by calculating the mean photon number in the catching cavity. In order to evaluate the intracavity field the explicit time dependence of $2\gamma_c(t)$ is needed. Noh calculates the time dependence assuming the simple case of a photon decaying in one cavity which is caught in a second one (the one with the time dependent damping constant) [1]. He uses quantum trajectory theory to find $2\gamma_c(t)$ and because an excursion into quantum trajectory would sidetrack us here, we just cite the result of

$$\gamma_c(t) = \gamma_c(0)\,\frac{e^{-2\gamma_I\,t}}{1+\left(\frac{\gamma_c(0)}{\gamma_I}\right)\left(1-e^{-2\gamma_I\,t}\right)}. \tag{6.1}$$

As the cavity is suppose to catch all of the input for very small times $\gamma_c(0) \to \infty$ is assumed and equation (6.1) simplifies to

$$\gamma_c(t) = \gamma_I \frac{e^{-2\gamma_I\,t}}{1-e^{-2\gamma_I\,t}}. \tag{6.2}$$

This gives the time dependence of $\gamma_c(t)$ for the simple two cavity case. The model can be used in the telportation case, too, because the teleporter is not supposed to alter the field between the cavities.

## 6.2 Mean photon number in the catching cavity

Given the time dependence of $\gamma_c(t)$ an expression for the intracavity field of the catching cavity $\hat{d}(t)$ is needed in order to proceed. As it is assumed that the teleporter gives just the input field, the intracavity field can be obtained with a Langevin equation approach of two coupled cavities, similar to the one of Cirac *et al.* [3].
The field of the input and the catching cavity are found by solving the respective Langevin equations (3.14), where the output field of the first cavity provides the input field of the catching cavity. The two equations in a rotating frame (according to equation (3.21) read as follows

$$\frac{\mathrm{d}\hat{a}}{\mathrm{d}t} = -\gamma_I \hat{a} + \sqrt{2\gamma_I}\hat{a}_{in} \tag{6.3}$$

$$\frac{\mathrm{d}\hat{d}}{\mathrm{d}t} = -\gamma_c(t)\hat{d} + \sqrt{2\gamma_c(t)}\left(\sqrt{2\gamma_I}\hat{a} - \hat{a}_{in}\right), \tag{6.4}$$

where the input field for the catching cavity as been replaced with the ouput of the input cavity according to equation (3.7). Note that no time delay between the two cavities is assumed, because a possible delay can be eliminated using "time delayed" operators in the first cavity (compare [3]). Equation (6.4) is a inhomogeneuos differential equation for $\hat{d}$ and the solution of the corresponding homogeneous equation is

$$\hat{d}_H(t) = d_0\, e^{-\int_0^t \mathrm{d}t' \gamma_c(t')}. \tag{6.5}$$

Now noting that $\gamma_c(t)$ of equation (6.2) can be written as

$$\gamma_c(t) = \frac{1}{2}\frac{\mathrm{d}}{\mathrm{d}t}\ln\left[-e^{-2\gamma_i\, t}\right] + 1 \tag{6.6}$$

the solution of the homogeneous equation (6.5) simplifies to

$$\hat{d}_H(t) = d_0 \frac{1}{\sqrt{e^{-2\gamma_i\, t} - 1}}. \tag{6.7}$$

For the solution of the inhomogeneous differential equation (6.4) the following Ansatz is used

$$\hat{d}(t) = d_0(t)\,\frac{1}{\sqrt{e^{-2\gamma_i\, t} - 1}}, \tag{6.8}$$

yielding to the following for $\hat{d}(t)$

$$\hat{d}(t) = \sqrt{2\gamma_I}\,\frac{1}{\sqrt{e^{-2\gamma_i\, t} - 1}}\int_0^t \mathrm{d}t' e^{-\gamma_I\, t'}\left(\sqrt{2\gamma_I}\hat{a}(t') - \hat{a}_{in}(t')\right). \tag{6.9}$$

That equation describes the dependence of the intracavity field operator $\hat{d}$ on the input field operators $\hat{a}$ and $\hat{a}_{in}$. Now, an equation for the average photon number inside the catching cavity

can be given in terms of the input correlation function

$$\langle \hat{d}^\dagger(t')\hat{d}(t'')\rangle(t) = 4\gamma_I^2 \, \frac{1}{e^{-2\gamma_i\, t} - 1} \int_0^t \mathrm{d}t' \int_0^t \mathrm{d}t'' \, e^{-\gamma_I (t'+t'')} \, \langle \hat{a}^\dagger(t')\hat{a}(t'')\rangle, \tag{6.10}$$

where the $\hat{a}_{in}$'s cancel because of (3.25).

### 6.2.1 Testing the scheme without the teleporter

In order to establish confidence in the mode matching of the cavity, equation (6.10) is tested with the correlation function of the decaying photon in the cavity without teleportation. If the mode matching is working properly the mean photon number in the steady state is supposed to be unity. The correlation function for a decaying photon has be calculated in section 5.2.1 and is given by equation (5.31). Using that equation in equation (6.10), the mean photon number becomes after a staightforward calculation

$$\begin{aligned} \langle \hat{d}^\dagger \hat{d}\rangle(t) &= 4\gamma_I^2 \, \frac{1}{e^{-2\gamma_i\, t} - 1} \int_0^t \mathrm{d}t' \int_0^t \mathrm{d}t'' \, e^{-\gamma_I (t'+t'')} \, e^{\gamma_I (t'+t'')} \\ &= 1 - e^{-2\gamma_I\, t}, \end{aligned} \tag{6.11}$$

which becomes in the steady state limit

$$\lim_{t\to\infty} \langle \hat{d}^\dagger \hat{d}\rangle(t) = \lim_{t\to\infty} \left(1 - e^{-2\gamma_I\, t}\right) = 1. \tag{6.12}$$

As expected the mean photon number is 1, prooving that the mode matching works. So with equation (6.10)an expression for the mean photon number inside the catching cavity in terms of the field incident on it is found and can now be used as a quantiative measure for the teleportation of one photon.

# Chapter 7

# Conclusion

## 7.1 Summary

In this thesis we started out in 1935 with the Einstein, Podolsky and Rosen paradox and worked our way through the history of teleportation. The mechanism of teleportation has been demonstrated on the simplest case, then generalising this idea before reaching a point today, where teleportation of whole quantum fields is possible.
Keeping in mind the intent of teleporting single photons the two continuous variable telportation protocols have been tested towards their suitability for that case. For the testing of the continuous variable teleportation protocol introduced in chapter 4 the Wigner representation was used and the suitabilty of that protocol for teleporting a single photon has been proven.
Because of that the broadband teleportation was introduced in chapter 5 and investigated. Due to a qualitaive analysis of the teleportation quality in dependence of the various bandwidthes, it has been found that the concerned bandwidths have to obey the following equation to achieve the highest quality of teleportation

$$\gamma_A \gg \gamma_s \gg \gamma_B \gg \gamma_i.$$

However, unsatisfied with just a qualitative analysis of the teleportation quality a measure for teleporting single photons has been developed in chapter 6. Based on schemes of quantum state transfer a cavity at the output of the teleporter is used to 'catch' the outcoming field. The catching is done by a fastly decaying damping constant of the cavity. Having caught the output field of the teleporter the mean photon number inside the cavity can then be calculated, expecting a value close but greater than unity, as noise from the squeezing beams has also been picked up during the catching. It has been shown that this scheme works perfectly without teleportation and the qualitative analysis of the teleporting quality can now be done with a simple calculation.

## 7.2 Future Work

Having devised a scheme for teleporting single photons and a measure for the quality of teleportation, the process can now be taken to the next step: The teleportation of a stream of single photon pulses. In fact the step is not that big after all, supposing that the photons arrive at the teleporter separated by a time that is longer than the inverse of their bandwith. Assuming that, no modifications of the teleportation protocol itself have to be done and for the quantitative measurement of the quality, only the time dependent cavity has to be reinitiated in the intervals of the incoming photons. Of course the photons that are already inside the catching cavity can escape while the damping constant is reinitiated, but a cascaded system of catching cavities would allow to capture all of the photons.

# Appendix A

# Calculations

## A.1 Derivation of $\langle X^{X\dagger}(t')\, X^{X}(t'')\rangle$

The correlation function $\langle X^{X\dagger}(t')\, X^{X}(t'')\rangle$ is needed in section 5.1.2 and will now be calculated. Replacing $\hat{X}$ by its definition (3.10) and expanding the expression, one ends up with an equation for the correlation function consisting of four terms as follows

$$\begin{aligned}\langle X^{X\dagger}(t')\, X^{X}(t'')\rangle &= \frac{1}{4}\,\langle(\hat{a}+\hat{a}^\dagger)\,(\hat{a}+\hat{a}^\dagger)\rangle \\ &= \frac{1}{4}[\,\underbrace{\langle\hat{a}(t')\hat{a}(t'')\rangle}_{1}+\underbrace{\langle\hat{a}(t')\hat{a}^\dagger(t'')\rangle}_{2}+\underbrace{\langle\hat{a}^\dagger(t')\hat{a}(t'')\rangle}_{3}+\underbrace{\langle\hat{a}^\dagger(t')\hat{a}^\dagger(t'')\rangle}_{4}\,]. \quad \text{(A.1)}\end{aligned}$$

The terms will be considered seperately, replacing $\hat{a}$ by $\sqrt{2\gamma_S}\,\hat{a}_c - \xi_a^t$ according to (3.7). While expanding the parenthesis in the correlation function, all normally ordered correlation functions involving the vacuum fluctutations will vanish because of (3.25).

**Term 1**

$$\begin{aligned}\langle\hat{a}(t')\hat{a}(t'')\rangle &= \langle\big(\hat{a}_c(t')+\xi_a^t(t'')\big)\,\big(\hat{a}_c(t'')+\xi_a^t\big)\rangle \\ &= 2\gamma_S\,\langle\hat{a}_c(t')\hat{a}_c(t'')\rangle - \sqrt{2\gamma_s}\,\langle\xi_a^t(t')\hat{a}_c(t'')\rangle \qquad \text{(A.2)}\end{aligned}$$

The correlation function of the vacuum fluctuation and the field is given by the following relation

$$-\sqrt{2\gamma_S}\langle\xi_a^t(t')\hat{a}_c(t'')\rangle = \begin{cases} 0 & t''<t' \\ \gamma_S\langle[\hat{a}_c(t''),\hat{a}_c(t')]\rangle & t''=t' \\ 2\gamma_S\langle[\hat{a}_c(t''),\hat{a}_c(t')]\rangle & t''>t' \end{cases}. \qquad \text{(A.3)}$$

This relation can be devised out of the Langevin equation and the Quantum Regression Theorem, see for example chapter 7 of [19]. However, the fact that there is no correlation for $t''>t'$ and some for $t''<t'$ can be made plausible on physical grounds. The Langevin equation gives an expression for the time evolution of the intracavity field $\hat{a}_c(t)$ due to the vacuum input field of the cavity at the same time $\xi_a^t(t)$. Therefore for times $t''<t'$ there cannot be any correlation as $\hat{a}_c(t'')$ is not yet dependent on $\xi_a^t(t')$. On the other hand for $t''>t'$ correlation exists as there is

now a dependence between $\hat{a}_c(t)$ and $\xi_a^t(t)$ through the Langevin equation. So with use of this relation (A.3), equation (A.2) yields to the following

$$\begin{aligned}\langle\hat{a}(t')\hat{a}(t'')\rangle &= 2\gamma_S\langle\hat{a}_c(t')\hat{a}_c(t'')\rangle + 2\gamma_S\begin{cases} 0 & t''<t' \\ \langle\hat{a}_c(t')\hat{a}_c(t'')\rangle - \langle\hat{a}_c(t')\hat{a}_c(t'')\rangle & t''>t' \end{cases} \\ &= 2\gamma_S\,\langle\hat{a}_c(t')\hat{a}_c(t'')\rangle. \end{aligned} \tag{A.4}$$

This is quite general, as no special attention is paid to the case $t' = t''$

**Term 2**

$$\langle\hat{a}(t')\hat{a}^\dagger(t'')\rangle = \langle\xi_a^t(t')\xi_a^{t\dagger}(t'')\rangle + 2\gamma_S\langle\hat{a}_c(t')\hat{a}_c^\dagger(t'')\rangle + \sqrt{2\gamma_S}\left[\langle\hat{a}_c(t')\xi_a^{t\dagger}(t'')\rangle + \langle\xi_a^t(t')\hat{a}_c^\dagger(t'')\rangle\right] \tag{A.5}$$

$\langle\xi_a^t(t')\xi_a^{t\dagger}(t'')\rangle = \delta(t'-t'')$ because $\delta$-correlated fluctuations were assumed. Furthermore the following two expressions - similar to (A.3) - are used

$$-\sqrt{2\gamma_S}\langle\xi_a^t(t')\hat{a}_c^\dagger(t'')\rangle = \begin{cases} 0 & t''<t' \\ \gamma_S\langle\left[\hat{a}_c^\dagger(t''),\hat{a}_c(t')\right]\rangle & t''=t' \\ 2\gamma_S\langle\left[\hat{a}_c^\dagger(t''),\hat{a}_c(t')\right]\rangle & t''>t' \end{cases} \tag{A.6}$$

$$-\sqrt{2\gamma_S}\langle\hat{a}_c(t')\xi_a^{t\dagger}(t'')\rangle = \begin{cases} 0 & t''<t' \\ \gamma_S\langle\left[\hat{a}_c(t''),\hat{a}_c^\dagger(t')\right]\rangle & t''=t' \\ 2\gamma_S\langle\left[\hat{a}_c(t''),\hat{a}_c^\dagger(t')\right]\rangle & t''>t' \end{cases}. \tag{A.7}$$

With that equation (A.5) becomes

$$\langle\hat{a}(t')\hat{a}^\dagger(t'')\rangle = 2\gamma_S\,\langle\hat{a}_c^\dagger(t')\hat{a}_c(t'')\rangle + \delta(t'-t''). \tag{A.8}$$

**Term 3**

$$\begin{aligned}\langle\hat{a}^\dagger(t')\hat{a}(t'')\rangle &= \langle\left(\hat{a}_c^\dagger + \xi_a^{t\dagger}\right)\,\left(\hat{a}_c + \xi_a^t\right)\rangle \\ &= 2\gamma_S\,\langle\hat{a}_c^\dagger(t')\hat{a}_c(t'')\rangle, \end{aligned} \tag{A.9}$$

**Term 4**

$$\begin{aligned}\langle\hat{a}^\dagger(t')\hat{a}^\dagger(t'')\rangle &= \langle\hat{a}(t')\hat{a}(t'')\rangle^* = 2\gamma_S\,\langle\hat{a}_c(t')\hat{a}_c(t'')\rangle^* \\ &= 2\gamma_S\,\langle\hat{a}_c(t')\hat{a}_c(t'')\rangle \end{aligned} \tag{A.10}$$

Putting these four terms ( (A.4),(A.8),(A.9),(A.10)) into expression (A.1) and noting the sim-

ilarity between terms 1 and 4 and the terms 2 and 3 the correlation function for the squeezed field is then given by

$$\langle X^{X\dagger}(t')\, X^{X}(t'')\rangle = \gamma_S \left[\langle \hat{a}_c(t')\hat{a}_c(t'')\rangle + \langle \hat{a}_c^\dagger(t')\hat{a}_c(t'')\rangle\right] + \frac{1}{4}\,\delta(t'-t''). \tag{A.11}$$

# Bibliography


[1] C. Noh, *Entanglement in Cascaded Open Quantum Systems*, PhD thesis, The University of Auckland, 2008.

[2] A. S. Parkins and H. J. Kimble, Journal of Optics B: Quantum and Semiclassical Optics **1**, 496 (1999), 1464-4266.

[3] J. I. Cirac, P. Zoller, H. J. Kimble, and H. Mabuchi, Physical Review Letters **78**, 3221 (1997).

[4] A. Einstein, B. Podolsky, and N. Rosen, Physical Review **47**, 777 (1935).

[5] J. Bell, Physics **1**, 195 (1964).

[6] S. J. Freedman and J. F. Clauser, Physical Review Letters **28**, 938 (1972).

[7] C. H. Bennett *et al.*, Physical Review Letters **70**, 1895 (1993).

[8] L. Vaidman, Physical Review A **49**, 1473 (1994).

[9] S. L. Braunstein and H. J. Kimble, Physical Review Letters **80**, 869 (1998).

[10] A. Furusawa *et al.*, Science **282**, 706 (1998).

[11] P. van Loock, S. L. Braunstein, and H. J. Kimble, Physical Review A **62**, 022309 (2000).

[12] C. Noh, H. Nha, M. Collett, and H. Carmichael, To be published (2009).

[13] S. L. Braunstein, A. Mann, and M. Revzen, Physical Review Letters **68**, 3259 (1992).

[14] D. F. Walls and G. J. Milburn, *Quantum Optics* (Springer, Berlin, 1994).

[15] M. O. Scully and M. S. Zubairy, *Quantum Optics* (Cambridge University Press, Cambridge, 1997).

[16] M. J. Collett and C. W. Gardiner, Physical Review A **30**, 1386 (1984).

[17] H. Carmichael and C. Noh, Continuous variable teleportation in stochastic electrodynamics, in *Laser Spectroscopy*, edited by P. Hannaford, A. Sidorov, H. Bachor, and K. Baldwin, pp. 324–333, Singapore, 2003, World Scientific.

[18] C. Noh, *Quantum Trajectory Theory of Continuous Variable Quantum Teleportation*, PhD thesis, The University of Auckland, 2005.

[19] H. Carmichael, *Statistical methods in quantum optics: master equations and fokker-planck equations* (Springer, New York, 1999).